SECTION 5-5: FREQUENCY TRANSFORMATIONS

Until now, only filters using the lowpass configuration have been examined. In this section, transforming the lowpass prototype into the other configurations: highpass, bandpass, bandreject (notch) and allpass will be discussed .

Lowpass to Highpass

The lowpass prototype is converted to highpass filter by scaling by 1/s in the transfer function. In practice, this amounts to capacitors becoming inductors with a value 1/C, and inductors becoming capacitors with a value of 1/L for passive designs. For active designs, resistors become capacitors with a value of 1/R, and capacitors become resistors with a value of 1/C. This applies only to frequency setting resistor, not those only used to set gain.

Another way to look at the transformation is to investigate the transformation in the s plane. The complex pole pairs of the lowpass prototype are made up of a real part, α, and an imaginary part, β. The normalized highpass poles are the given by:

$$\alpha_{HP} = \frac{\alpha}{\alpha^2 + \beta^2} \qquad \text{Eq. 5-43}$$

and:

$$\beta_{HP} = \frac{\beta}{\alpha^2 + \beta^2} \qquad \text{Eq. 5-44}$$

A simple pole, α_0, is transformed to:

$$\alpha_{\omega,HP} = \frac{1}{\alpha_0} \qquad \text{Eq. 5-45}$$

Lowpass zeros, $\omega_{z,lp}$, are transformed by:

$$\omega_{Z,HP} = \frac{1}{\omega_{Z,LP}} \qquad \text{Eq. 5-46}$$

In addition, a number of zeros equal to the number of poles are added at the origin.

After the normalized lowpass prototype poles and zeros are converted to highpass, they are then denormalized in the same way as the lowpass, that is, by frequency and impedance.

As an example a 3 pole 1dB Chebyshev lowpass filter will be converted to a highpass filter.

From the design tables of the last section:

$$\alpha_{LP1} = .2257$$
$$\beta_{LP1} = .8822$$
$$\alpha_{LP2} = .4513$$

This will transform to:

$$\alpha_{HP1} = .2722$$
$$\beta_{HP1} = 1.0639$$
$$\alpha_{HP2} = 2.2158$$

Which then becomes:

$$F_{01} = 1.0982$$
$$\alpha = .4958$$
$$Q = 2.0173$$

$$F_{02} = 2.2158$$

A worked out example of this transformation will appear in a later section.

A highpass filter can be considered to be a lowpass filter turned on its side. Instead of a flat response at DC, there is a rising response of n × (20dB/decade), due to the zeros at the origin, where n is the number of poles. At the corner frequency a response of n × (–20dB/decade) due to the poles is added to the above rising response. This results in a flat response beyond the corner frequency.

Lowpass to Bandpass

Transformation to the bandpass response is a little more complicated. Bandpass filters can be classified as either wideband or narrowband, depending on the separation of the poles. If the corner frequencies of the bandpass are widely separated (by more than 2 octaves), the filter is wideband and is made up of separate lowpass and highpass sections, which will be cascaded. The assumption made is that with the widely separated poles, interaction between them is minimal. This condition does not hold in the case of a narrowband bandpass filter, where the separation is less than 2 octaves. We will be covering the narrowband case in this discussion.

As in the highpass transformation, start with the complex pole pairs of the lowpass prototype, α and β. The pole pairs are known to be complex conjugates. This implies symmetry around DC (0Hz.). The process of transformation to the bandpass case is one of mirroring the response around DC of the lowpass prototype to the same response around the new center frequency F_0.

This clearly implies that the number of poles and zeros is doubled when the bandpass transformation is done. As in the lowpass case, the poles and zeros below the real axis are ignored. So an nth order lowpass prototype transforms into an nth order bandpass, even though the filter order will be 2n. An nth order bandpass filter will consist of n sections, versus n/2 sections for the lowpass prototype. It may be convenient to think of the response as n poles up and n poles down.

The value of Q_{BP} is determined by:

$$Q_{BP} = \frac{F_0}{BW} \qquad \text{Eq. 5-47}$$

where BW is the bandwidth at some level, typically –3dB.

A transformation algorithm was defined by Geffe (Reference 16) for converting lowpass poles into equivalent bandpass poles.

Given the pole locations of the lowpass prototype:

$$-\alpha \pm j\beta \qquad \text{Eq. 5-48}$$

and the values of F_0 and Q_{BP}, the following calculations will result in two sets of values for Q and frequencies, F_H and F_L, which define a pair of bandpass filter sections.

$$C = \alpha^2 + \beta^2 \qquad \text{Eq. 5-49}$$

$$D = \frac{2\alpha}{Q_{BP}} \qquad \text{Eq. 5-50}$$

$$E = \frac{C}{Q_{BP}^2} + 4 \qquad \text{Eq. 5-51}$$

$$G = \sqrt{E^2 - 4\,D^2} \qquad \text{Eq. 5-52}$$

$$Q = \sqrt{\frac{E + G}{2\,D^2}} \qquad \text{Eq. 5-53}$$

Observe that the Q of each section will be the same.

The pole frequencies are determined by:

$$M = \frac{\alpha\,Q}{Q_{BP}} \qquad \text{Eq. 5-54}$$

$$W = M + \sqrt{M2 - 1} \qquad \text{Eq. 5-55}$$

$$F_{BP1} = \frac{F_0}{W} \qquad \text{Eq. 5-56}$$

$$F_{BP2} = W\,F_0 \qquad \text{Eq. 5-57}$$

Each pole pair transformation will also result in 2 zeros that will be located at the origin.

A normalized lowpass real pole with a magnitude of α_0 is transformed into a bandpass section where:

$$Q = \frac{Q_{BP}}{\alpha_0} \qquad \text{Eq. 5-58}$$

and the frequency is F_0.

Each single pole transformation will also result in a zero at the origin.

Elliptical function lowpass prototypes contain zeros as well as poles. In transforming the filter the zeros must be transformed as well. Given the lowpass zeros at $\pm j\omega_Z$, the bandpass zeros are obtained as follows:

$$M = \frac{\alpha Q}{Q_{BP}} \qquad \text{Eq. 5-59}$$

$$W = M + \sqrt{M2 - 1} \qquad \text{Eq. 5-60}$$

$$F_{BP1} = \frac{F_0}{W} \qquad \text{Eq. 5-61}$$

$$F_{BP2} = W F_0 \qquad \text{Eq. 5-62}$$

Since the gain of a bandpass filter peaks at F_{BP} instead of F_0, an adjustment in the amplitude function is required to normalize the response of the aggregate filter. The gain of the individual filter section is given by:

$$A_R = A_0 \sqrt{1 + Q^2 \left(\frac{F_0}{F_{BP}} - \frac{F_{BP}}{F_0} \right)^2} \qquad \text{Eq. 5-63}$$

where:

A_0 = gain a filter center frequency
A_R = filter section gain at resonance
F_0 = filter center frequency
F_{BP} = filter section resonant frequency.

Again using a 3 pole 1dB Chebychev as an example:

$\alpha_{LP1} = .2257$
$\beta_{LP1} = .8822$
$\alpha_{LP2} = .4513$

A 3 dB bandwidth of 0.5Hz. with a center frequency of 1Hz. is arbitrarily assigned. Then:

$$Q_{BP} = 2$$

Going through the calculations for the pole pair the intermediate results are:

$$C = 0.829217 \qquad D = 0.2257$$
$$E = 4.207034 \qquad G = 4.098611$$
$$M = 1.01894 \qquad W = 1.214489$$

and:

$$F_{BP1} = 0.823391 \qquad F_{BP2} = 1.214489$$
$$Q_{BP1} = Q_{BP2} = 9.029157$$

And for the single pole:

$$F_{BP3} = 1 \qquad Q_{BP3} = 4.431642$$

Again a full example will be worked out in a later section.

Lowpass to Bandreject (Notch)

As in the bandpass case, a bandreject filter can be either wideband or narrowband, depending on whether or not the poles are separated by 2 octaves or more. To avoid confusion, the following convention will be adopted. If the filter is wideband, it will be referred to as a bandreject filter. A narrowband filter will be referred to as a notch filter.

One way to build a notch filter is to construct it as a bandpass filter whose output is subtracted from the input (1 – BP). Another way is with cascaded lowpass and highpass sections, especially for the bandreject (wideband) case. In this case, the sections are in parallel, and the output is the difference.

Just as the bandpass case is a direct transformation of the lowpass prototype, where DC is transformed to F_0, the notch filter can be first transformed to the highpass case, and then DC, which is now a zero, is transformed to F_0.

A more general approach would be to convert the poles directly. A notch transformation results in two pairs of complex poles and a pair of second order imaginary zeros from each lowpass pole pair.

First, the value of Q_{BR} is determined by:

$$Q_{BR} = \frac{F_0}{BW} \qquad \text{Eq. 5-64}$$

where BW is the bandwidth at – 3dB.

Given the pole locations of the lowpass prototype

$$-\alpha \pm j\beta \qquad \text{Eq. 5-65}$$

and the values of F_0 and Q_{BR}, the following calculations will result in two sets of values for Q and frequencies, F_H and F_L, which define a pair of notch filter sections.

$$C = \alpha^2 + \beta^2 \qquad \text{Eq. 5-66}$$

$$D = \frac{\alpha}{Q_{BR}C} \qquad \text{Eq. 5-67}$$

$$E = \frac{\beta}{Q_{BR}C} \qquad \text{Eq. 5-68}$$

$$F = E^2 - 4\,D^2 + 4 \qquad \text{Eq. 5-69}$$

$$G = \sqrt{\frac{F}{2} + \sqrt{\frac{F2}{4}} + D^2\,E^2} \qquad \text{Eq. 5-70}$$

$$H = \frac{D\,E}{G} \qquad \text{Eq. 5-71}$$

$$K = \frac{1}{2}\sqrt{(D + H)^2 + (E + G)^2} \qquad \text{Eq. 5-72}$$

$$Q = \frac{K}{D + H} \qquad \text{Eq. 5-73}$$

The pole frequencies are given by:

$$F_{BR1} = \frac{F_0}{K} \qquad \text{Eq. 5-74}$$

$$F_{BR2} = K\,F_0 \qquad \text{Eq. 5-75}$$

$$F_Z = F_0 \qquad \text{Eq. 5-76}$$

$$F_0 = \sqrt{F_{BR1} * F_{BR2}} \qquad \text{Eq. 5-77}$$

where F_0 is the notch frequency and the geometric mean of F_{BR1} and F_{BR2}.

A simple real pole, α_0, transforms to a single section having a Q given by:

$$Q = Q_{BR}\,\alpha_0 \qquad \text{Eq. 5-78}$$

with a frequency $F_{BR} = F_0$. There will also be transmission zero at F_0.

In some instances, such as the elimination of the power line frequency (hum) from low level sensor measurements, a notch filter for a specific frequency may be designed.

Assuming that an attenuation of A dB is required over a bandwidth of B, then the required Q is determined by:

$$Q = \frac{\omega_0}{B\sqrt{10^{.1A} - 1}} \qquad \text{Eq. 5-79}$$

A 3 pole 1 dB Chebychev is again used as an example:

$$\alpha_{LP1} = .2257$$
$$\beta_{LP1} = .8822$$
$$\alpha_{LP2} = .4513$$

A 3dB bandwidth of 0.1 Hz. with a center frequency of 1Hz. is arbitrarily assigned. Then:

$$Q_{BR} = 10$$

Going through the calculations for the pole pair yields the intermediate results:

$$C = 0.829217 \qquad D = 0.027218$$
$$E = 0.106389 \qquad F = 4.079171$$
$$G = 2.019696 \qquad H = 0.001434$$
$$K = 1.063139$$

and

$$F_{BR1} = 0.94061 \qquad F_{BR2} = 1.063139$$
$$Q_{BR1} = Q_{BR2} = 37.10499$$

and for the single pole

$$F_{BP3} = 1 \qquad Q_{BP3} = 4.431642$$

Once again a full example will be worked out in a later section.

Lowpass to Allpass

The transformation from lowpass to allpass involves adding a zero in the right hand side of the s plane corresponding to each pole in the left hand side.

In general, however, the allpass filter is usually not designed in this manner. The main purpose of the allpass filter is to equalize the delay of another filter. Many modulation schemes in communications use some form or another of quadrature modulation, which processes both the amplitude and phase of the signal.

Allpass filters add delay to flatten the delay curve without changing the amplitude. In most cases a closed form of the equalizer is not available. Instead the amplitude filter is designed and the delay calculated or measured. Then graphical means or computer programs are used to figure out the required sections of equalization.

Each section of the equalizer gives twice the delay of the lowpass prototype due to the interaction of the zeros. A rough estimate of the required number of sections is given by:

$$n = 2\,\Delta_{BW}\,\Delta_T + 1$$

Where Δ_{BW} is the bandwidth of interest in hertz and Δ_T is the delay distortion over Δ_{BW} in seconds.

SECTION 5-6: FILTER REALIZATIONS

Now that it has been decided what to build, it now must be decided how to build it. That means that it is necessary to decide which of the filter topologies to use. Filter design is a two step process where it is determined what is to be built (the filter transfer function) and then how to build it (the topology used for the circuit).

In general, filters are built out of one-pole sections for real poles, and two-pole sections for pole pairs. While you can build a filter out of three-pole, or higher order sections, the interaction between the sections increases, and therefore, component sensitivities go up.

It is better to use buffers to isolate the various sections. In addition, it is assumed that all filter sections are driven from a low impedance source. Any source impedance can be modeled as being in series with the filter input.

In all of the design equation figures the following convention will be used:

H = circuit gain in the passband or at resonance
F_0 = cutoff or resonant frequency in Hertz
ω_0 = cutoff or resonant frequency in radians/sec.
Q = circuit "quality factor". Indicates circuit peaking.
$\alpha = 1/Q$ = damping ratio

It is unfortunate that the symbol α is used for damping ratio. It is not the same as the α that is used to denote pole locations ($\alpha \pm j\beta$). The same issue occurs for Q. It is used for the *circuit* quality factor and also the *component* quality factor, which are not the same thing.

The circuit Q is the amount of peaking in the circuit. This is a function of the angle of the pole to the origin in the s plane. The component Q is the amount of losses in what should be lossless reactances. These losses are the parasitics of the components; dissipation factor, leakage resistance, ESR (equivalent series resistance), etc. in capacitors and series resistance and parasitic capacitances in inductors.

Single Pole RC

The simplest filter building block is the passive RC section. The single pole can be either lowpass or highpass. Odd order filters will have a single pole section.

The basic form of the lowpass RC section is shown in Figure 5-37(A). It is assumed that the load impedance is high (> ×10), so that there is no loading of the circuit. The load will be in parallel with the shunt arm of the filter. If this is not the case, the section will have to be buffered with an op amp. A lowpass filter can be transformed to a highpass filter by exchanging the resistor and the capacitor. The basic form of the highpass filter is shown in Figure 5-37(B). Again it is assumed that load impedance is high.

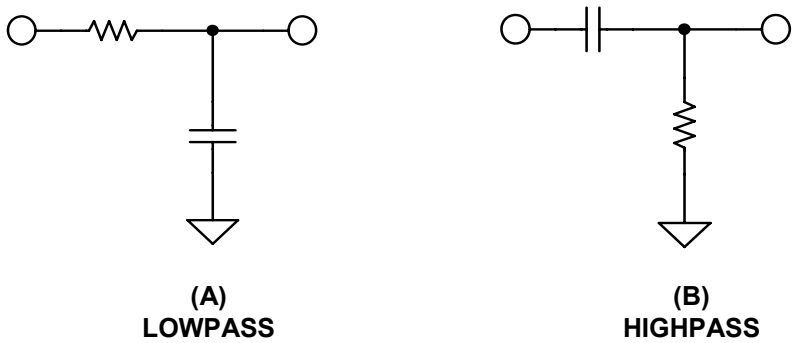

Figure 5-37: *Single pole sections*

The pole can also be incorporated into an amplifier circuit. Figure 5-38(A) shows an amplifier circuit with a capacitor in the feedback loop. This forms a lowpass filter since as frequency is increased, the effective feedback impedance decreases, which causes the gain to decrease.

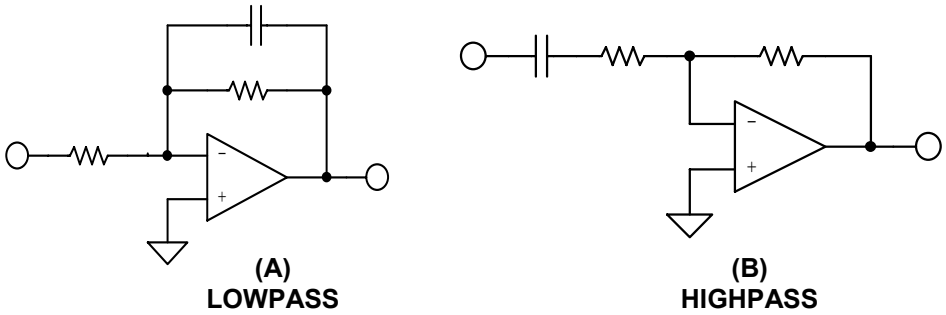

Figure 5-38: *Single pole active filter blocks*

Figure 5-38(B) shows a capacitor in series with the input resistor. This causes the signal to be blocked at DC. As the frequency is increased from DC, the impedance of the capacitor decreases and the gain of the circuit increases. This is a highpass filter.

The design equations for single pole filters appear in Figure 5-66.

Passive LC Section

While not strictly a function that uses op amps, passive filters form the basis of several active filters topologies and are included here for completeness.

As in active filters, passive filters are built up of individual subsections. Figure 5-39 shows lowpass filter sections. The full section is the basic two pole section. Odd order filters use one half section which is a single pole section. The m derived sections, shown in Figure 5-40, are used in designs requiring transmission zeros as well as poles.

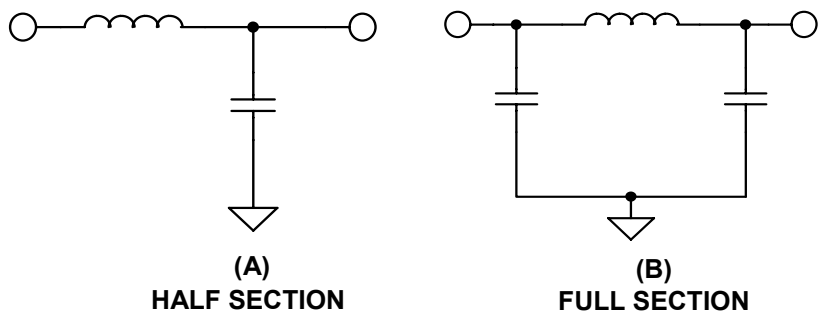

Figure 5-39: *Passive filter blocks (lowpass)*

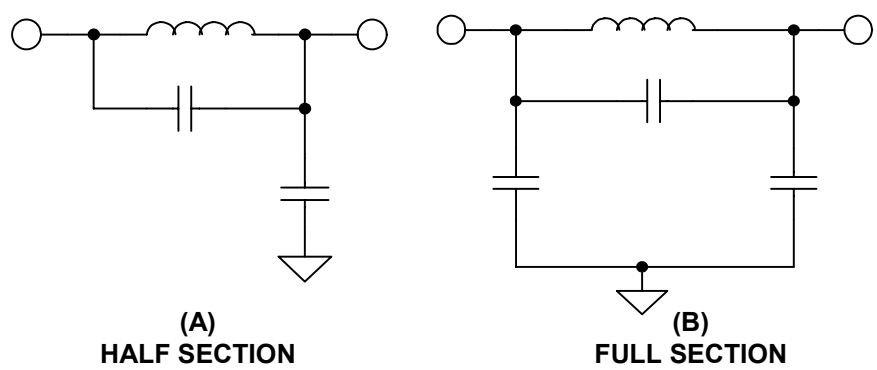

Figure 5-40: *Passive filter blocks (lowpass m-derived)*

A lowpass filter can be transformed into a highpass (see Figures 5-41 and 5-42) by simply replacing capacitors with inductors with reciprocal values and vise versa so:

$$L_{HP} = \frac{1}{C_{LP}} \qquad \text{Eq. 5-80}$$

and

$$C_{HP} = \frac{1}{L_{LP}} \qquad \text{Eq. 5-81}$$

Transmission zeros are also reciprocated in the transformation so:

$$\omega_{Z,HP} = \frac{1}{\omega_{Z,LP}} \qquad \text{Eq. 5-82}$$

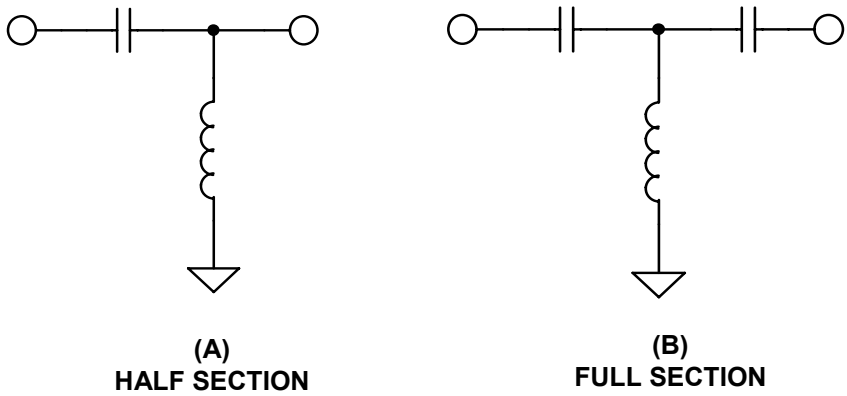

Figure 5-41: *Passive filter blocks (highpass)*

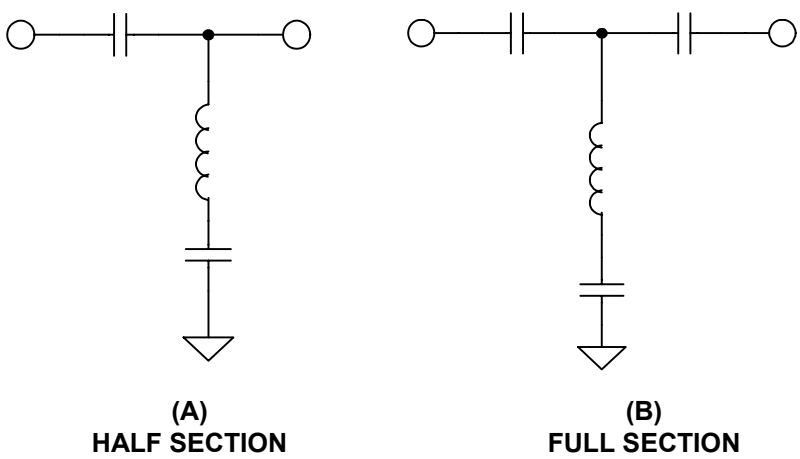

Figure 5-42: *Passive filter blocks (highpass m-derived)*

The lowpass prototype is transformed to bandpass and bandreject filters as well by using the table in Figure 5-43.

For a passive filter to operate, the source and load impedances must be specified. One issue with designing passive filters is that in multipole filters each section is the load for the preceding sections and also the source impedance for subsequent sections, so component interaction is a major concern. Because of this, designers typically make use of tables, such as in Williams's book (Reference 2).

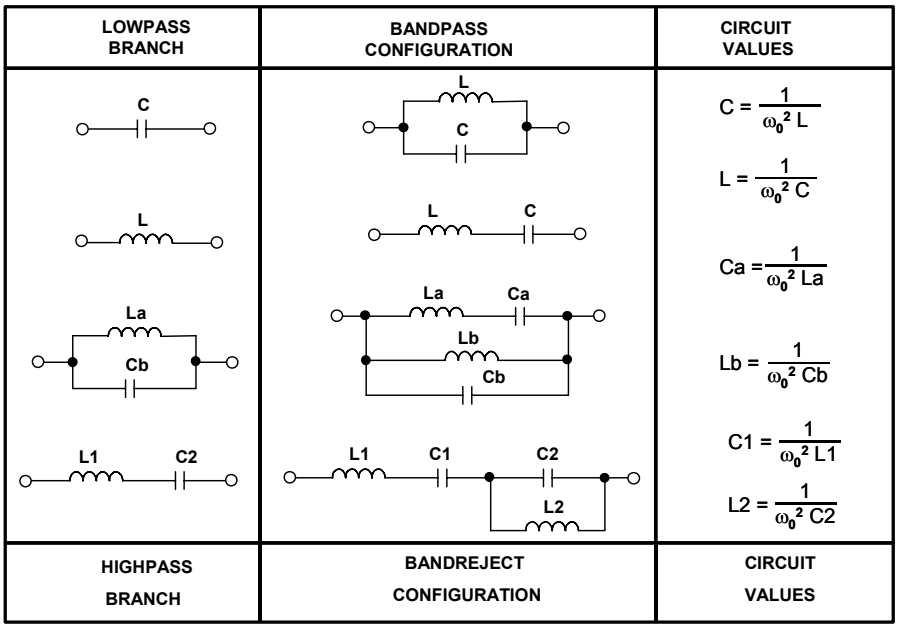

Figure 5-43: *Lowpass → bandpass and highpass → bandreject transformation*

Integrator

Any time that you put a frequency-dependent impedance in a feedback network the inverse frequency response is obtained. For example, if a capacitor, which has a frequency dependent impedance that decreases with increasing frequency, is put in the feedback network of an op amp, an integrator is formed, as in Figure 5-44.

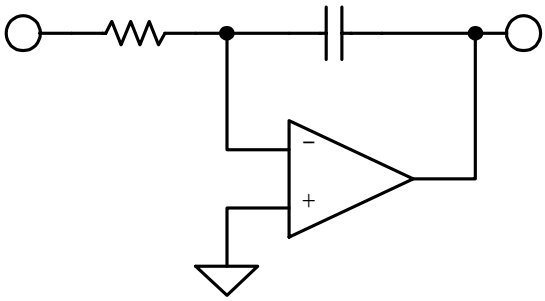

Figure 5-44: Integrator

The integrator has high gain (i.e. the open loop gain of the op amp) at DC. An integrator can also be thought of as a low pass filter with a cutoff frequency of 0Hz.

General Impedance Converter

Figure 5-45 is the block diagram of a general impedance converter. The impedance of this circuit is:

$$Z = \frac{Z1\ Z3\ Z5}{Z2\ Z4} \qquad \text{Eq. 5-83}$$

By substituting one or two capacitors into appropriate locations (the other locations being resistors), several impedances can be synthesized (see Reference 25).

One limitation of this configuration is that the lower end of the structure must be grounded.

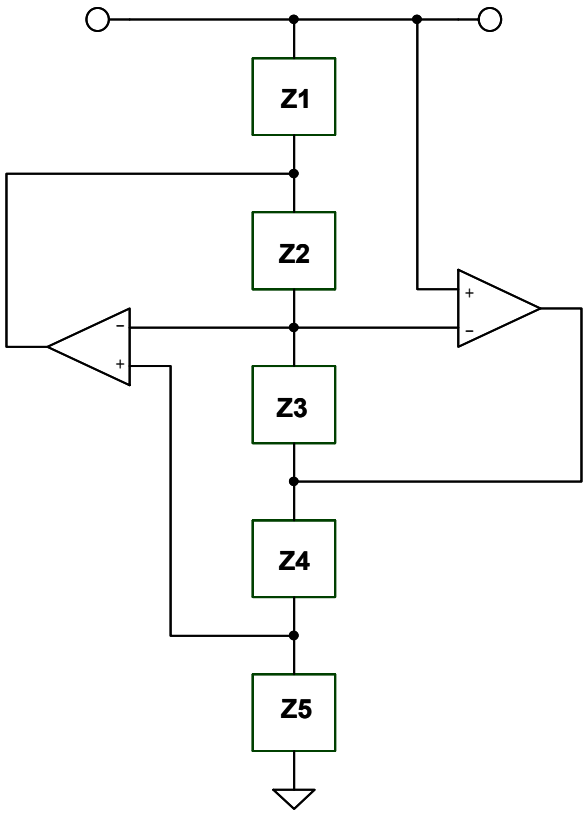

Figure 5-45: *General impedance converter*

Active Inductor

Substituting a capacitor for Z4 and resistors for Z1, Z2, Z3 & Z5 in the GIC results in an impedance given by:

$$Z_{11} = \frac{sC\ R1\ R3\ R5}{R2} \qquad \text{Eq. 5-84}$$

By inspection it can be shown that this is an inductor with a value of:

$$L = \frac{C\ R1\ R3\ R5}{R2} \qquad \text{Eq. 5-85}$$

This is just one way to simulate an inductor as shown in Figure 5-46.

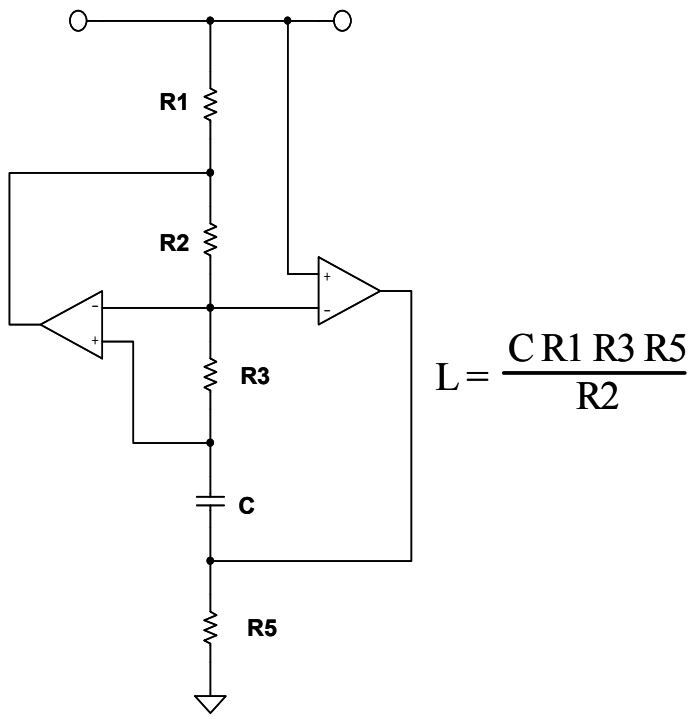

Figure 5-46: *Active inductor*

Frequency Dependent Negative Resistor (FDNR)

By substituting capacitors for two of the Z1, Z3 or Z5 elements, a structure known as a frequency dependant negative resistance (FDNR) is generated. The impedance of this structure is:

$$Z_{11} = \frac{sC^2\,R2\,R4}{R5} \qquad \text{Eq. 5-86}$$

This impedance, which is called a D element, has the value:

$$D = C^2\,R4 \qquad \text{Eq. 5-87}$$

assuming

$$C1 = C2 \text{ and } R2 = R5. \qquad \text{Eq. 5-88}$$

The three possible versions of the FDNR are shown in Figure 5-47.

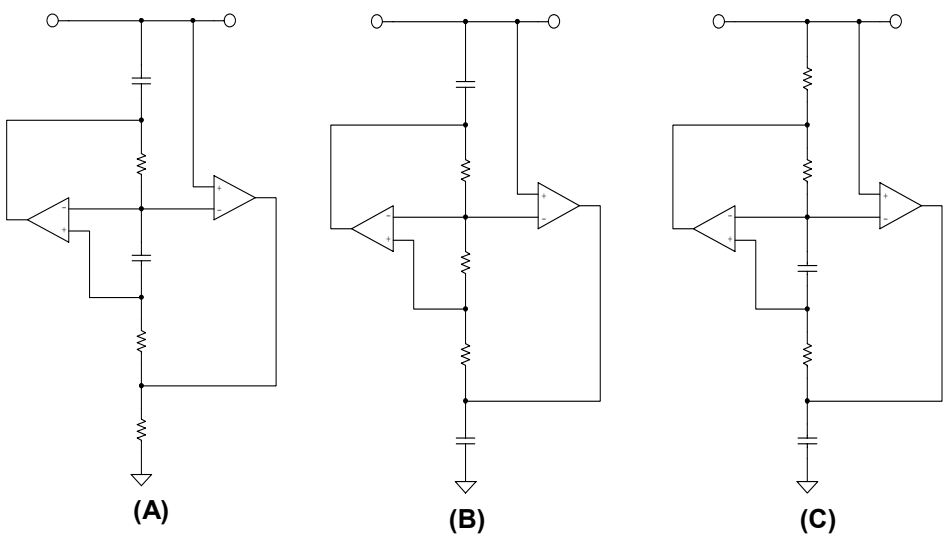

Figure 5-47: *Frequency dependent negative resistor blocks*

There is theoretically no difference in these three blocks, and so they should be interchangeable. In practice though there may be some differences. Circuit (a) is sometimes preferred because it is the only block to provide a return path for the amplifier bias currents.

For the FDNR filter (see Reference 24), the passive realization of the filter is used as the basis of the design. As in the passive filter, the FDNR filter must then be denormalized for frequency and impedance. This is typically done before the conversion by 1/s. First take the denormalized passive prototype filter and transform the elements by 1/s. This means that inductors, whose impedance is equal to sL, transform into a resistor with an impedance of L. A resistor of value R becomes a capacitor with an impedance of R/s; and a capacitor of impedance 1/sC transforms into a frequency dependent resistor, D, with an

impedance of $1/s^2C$. The transformations involved with the FDNR configuration and the GIC implementation of the D element are shown in Figure 5-48. We can apply this transformation to lowpass, highpass, bandpass or notch filters, remembering that the FDNR block must be restricted to shunt arms.

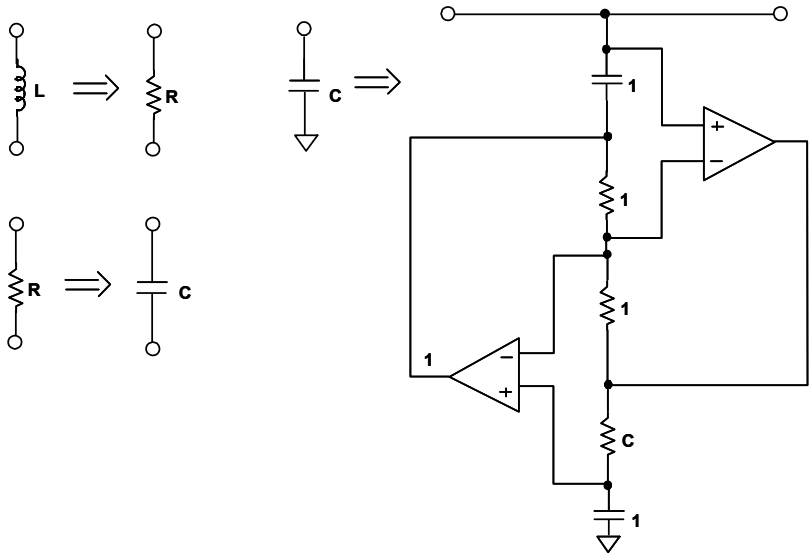

Figure 5-48: *1/s transformation*

A worked out example of the FDNR filter is included in the next section.

A perceived advantage of the FDNR filter in some circles is that there are no op amps in the direct signal path, which can add noise and/or distortion, however small, to the signal. It is also relatively insensitive to component variation. These advantages of the FDNR come at the expense of an increase in the number of components required.

Sallen-Key

The Sallen-Key configuration, also known as a voltage control voltage source (VCVS), was first introduced in 1955 by R. P. Sallen and E. L. Key of MIT's Lincoln Labs (see Reference 14). It is one of the most widely used filter topologies and is shown in Figure 5-49. One reason for this popularity is that this configuration shows the least dependence of filter performance on the performance of the op amp. This is due to the fact that the op amp is configured as an amplifier, as opposed to an integrator, which minimizes the gain-bandwidth requirements of the op amp. This infers that for a given op amp, you will be able to design a higher frequency filter than with other topologies since the op amp gain bandwidth product will not limit the performance of the filter as it would if it were configured as an integrator. The signal phase through the filter is maintained (noninverting configuration).

Another advantage of this configuration is that the ratio of the largest resistor value to the smallest resistor value and the ratio of the largest capacitor value to the smallest capacitor value (component spread) are low, which is good for manufacturability. The frequency and Q terms are somewhat independent, but they are very sensitive to the gain parameter. The Sallen-Key is very Q-sensitive to element values, especially for high Q sections. The design equations for the Sallen-Key low pass are shown in Figure 5-67.

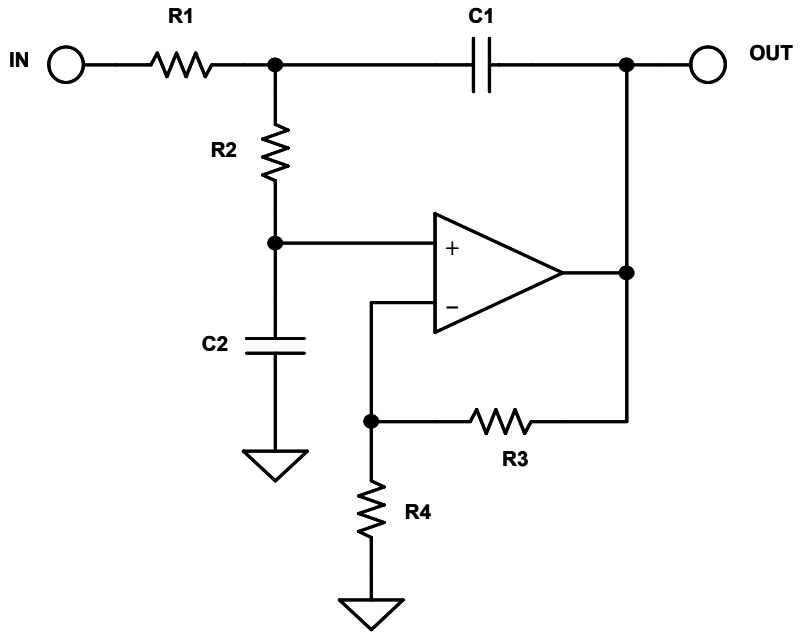

Figure 5-49: *Sallen-Key lowpass filter*

There is a special case of the Sallen–Key lowpass filter. If the gain is set to 2, the capacitor values, as well as the resistor values, will be the same.

While the Sallen–Key filter is widely used, a serious drawback is that the filter is not easily tuned, due to interaction of the component values on F_0 and Q.

To transform the low pass into the highpass we simply exchange the capacitors and the resistors in the frequency determining network (i.e., *not* the op amp gain resistors). This is shown in Figure 5-50 (opposite). The comments regarding sensitivity of the filter given above for the low pass case apply to the high pass case as well. The design equations for the Sallen-Key high pass are shown in Figure 5-68.

The bandpass case of the Sallen–Key filter has a limitation (see Figure 5-51 below). The value of Q will determine the gain of the filter, i.e., it can not be set independent, as in the lowpass or highpass cases. The design equations for the Sallen-Key bandpass are shown in Figure 5-69.

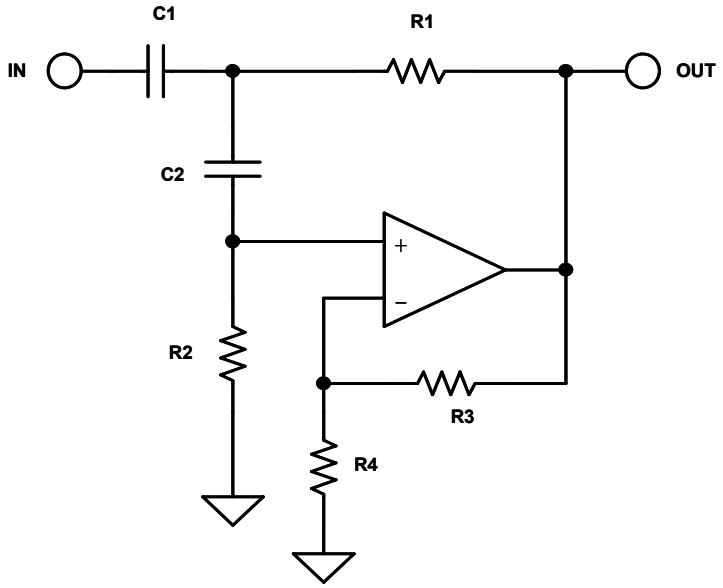

Figure 5-50: *Sallen-Key highpass filter*

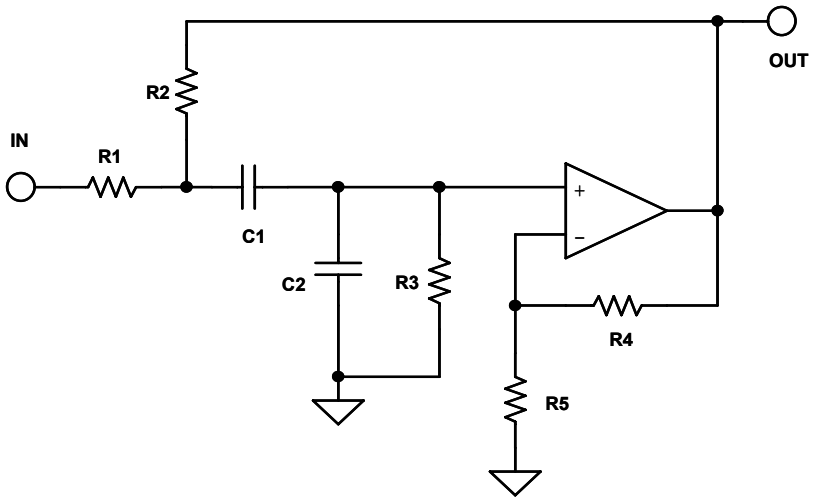

Figure 5-51: *Sallen-Key bandpass filter*

A Sallen–Key notch filter may also be constructed, but it has a large number of undesirable characteristics. The resonant frequency, or the notch frequency, can not be adjusted easily due to component interaction. As in the bandpass case, the section gain is fixed by the other design parameters, and there is a wide spread in component values, especially capacitors. Because of this and the availability of easier to use circuits, it is not covered here.

Multiple Feedback

The multiple feedback filter uses an op amp as an integrator as shown in Figure 5-52 below. Therefore, the dependence of the transfer function on the op amp parameters is greater than in the Sallen-Key realization. It is hard to generate high Q, high frequency sections due to the limitations of the open loop gain of the op amp. A rule of thumb is that the open loop gain of the op amp should be at least 20dB (×10) above the amplitude response at the resonant (or cutoff) frequency, including the peaking caused by the Q of the filter. The peaking due to Q will cause an amplitude, A_0:

$$A_0 = H\,Q \qquad \text{Eq. 5-89}$$

where H is the gain of the circuit. The multiple feedback filter will invert the phase of the signal. This is equivalent to adding the resulting 180° phase shift to the phase shift of the filter itself.

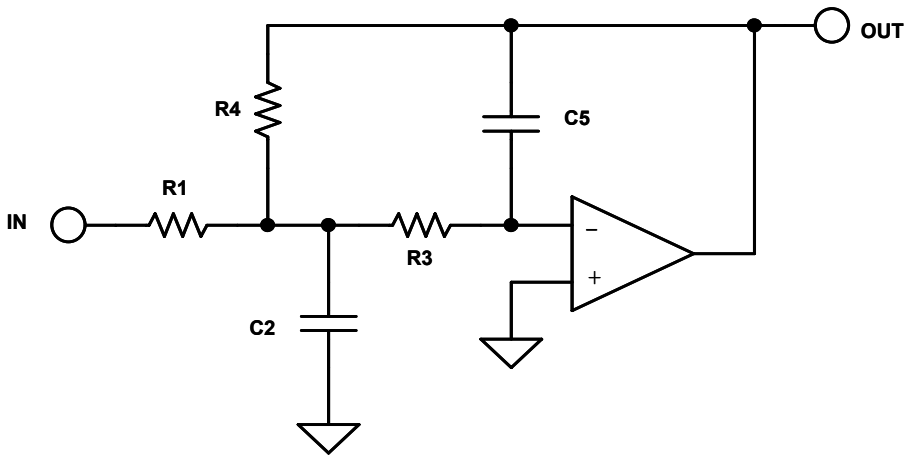

Figure 5-52: *Multiple feedback lowpass*

The maximum to minimum component value ratios is higher in the multiple feedback case than in the Sallen-Key realization. The design equations for the multiple feedback lowpass are given in Figure 5-70.

Comments made about the multiple feedback low pass case apply to the highpass case as well (see Figure 5-53 opposite). Note that we again swap resistors and capacitors to convert the lowpass case to the highpass case. The design equations for the multiple feedback highpass are given in Figure 5-71.

The design equations for the multiple feedback bandpass case (see Figure 5-54 opposite) are given in Figure 5-72.

This circuit is widely used in low Q (< 20) applications. It allows some tuning of the resonant frequency, F_0, by making R2 variable. Q can be adjusted (with R5) as well, but this will also change F_0.

Tuning of F_0 can be accomplished by monitoring the output of the filter with the horizontal channel of an oscilloscope, with the input to the filter connected to the vertical channel. The display will be a Lissajous pattern. This pattern will be an ellipse that will collapse to a straight line at resonance, since the phase shift will be 180°. You could also adjust the output for maximum output, which will also occur at resonance, but this is usually not as precise, especially at lower values of Q where there is a less pronounced peak.

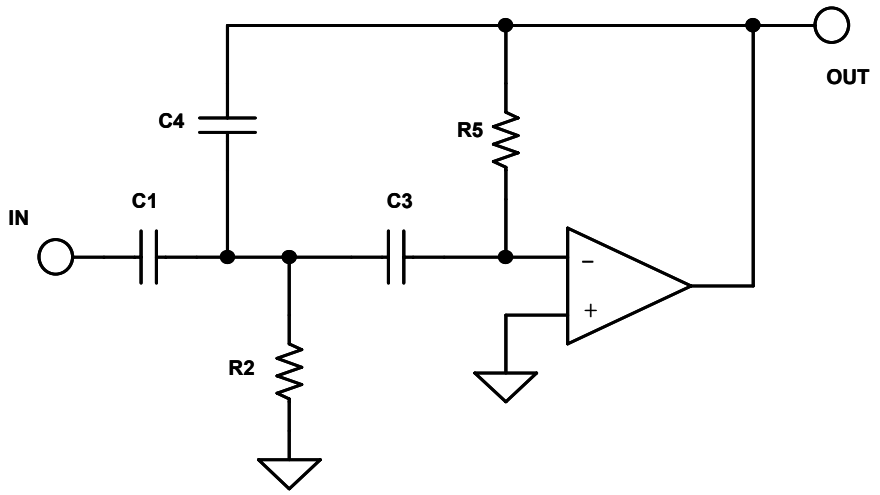

Figure 5-53: *Multiple feedback highpass*

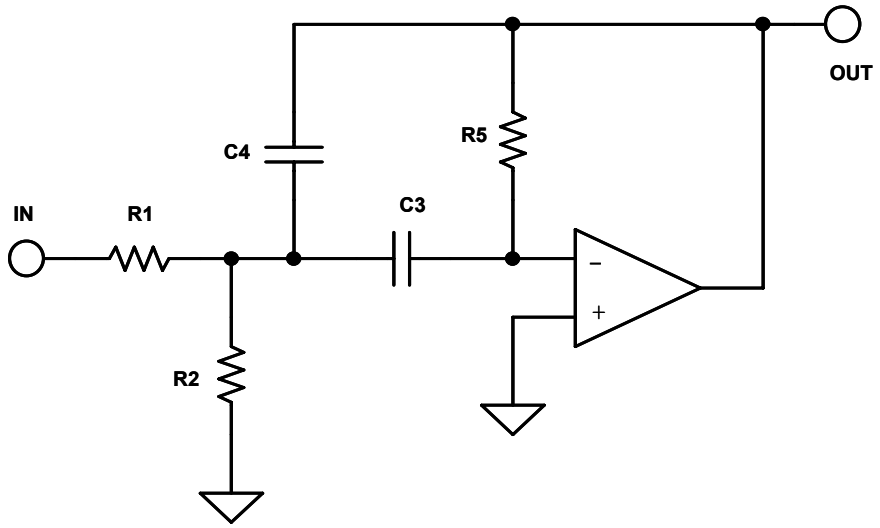

Figure 5-54: *Multiple feedback bandpass*

State Variable

The state-variable realization (see Reference 11) is shown in Figure 5-55, along with the design equations in Figure 5-73. This configuration offers the most precise implementation, at the expense of many more circuit elements. All three major parameters (gain, Q & ω_0) can be adjusted independently, and lowpass, highpass, and bandpass outputs are available simultaneously. Note that the lowpass and highpass outputs are inverted in phase while the bandpass output maintains the phase. The gain of each of the outputs of the filter is also independently variable. With an added amplifier section summing the low pass and highpass sections the notch function can also be synthesized. By changing the ratio of the summed sections, lowpass notch, standard notch and highpass notch functions can be realized. A standard notch may also be realized by subtracting the bandpass output from the input with the added op amp section. An allpass filter may also be built with the four amplifier configuration by subtracting the bandpass output from the input. In this instance, the bandpass gain must equal 2.

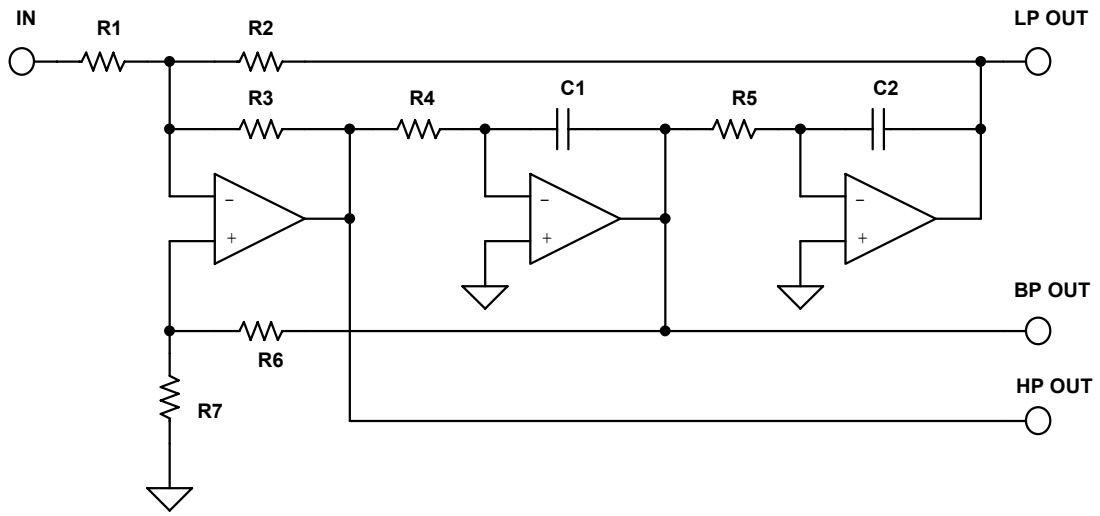

Figure 5-55: *State variable filter*

Since all parameters of the state variable filter can be adjusted independently, component spread can be minimized. Also, variations due to temperature and component tolerances are minimized. The op amps used in the integrator sections will have the same limitations on op amp gain-bandwidth as described in the multiple feedback section.

Tuning the resonant frequency of a state variable filter is accomplished by varying R4 and R5. While you don't have to tune both, if you are varying over a wide range it is generally preferable. Holding R1 constant, tuning R2 sets the lowpass gain and tuning R3 sets the highpass gain. Bandpass gain and Q are set by the ratio of R6 & R7.

Since the parameters of a state variable filter are independent and tunable, it is easy to add electronic control of frequency, Q and ω_0. This adjustment is accomplished by using an analog multiplier, multiplying DACs (MDACs) or digital pots, as shown in one of the examples in a later section. For the integrator sections adding the analog multiplier or MDAC effectively increases the time constant by dividing the voltage driving the resistor,

which, in turn, provides the charging current for the integrator capacitor. This in effect raises the resistance and, in turn, the time constant. The Q and gain can be varied by changing the ratio of the various feedback paths. A digital pot will accomplish the same feat in a more direct manner, by directly changing the resistance value. The resultant tunable filter offers a great deal of utility in measurement and control circuitry. A worked out example is given in Section 8 of this chapter.

Biquadratic (Biquad)

A close cousin of the state variable filter is the biquad as shown in Figure 5-56. The name of this circuit was first used by J. Tow in 1968 (Reference 11) and later by L. C. Thomas in 1971 (see Reference 12). The name derives from the fact that the transfer function is a quadratic function in both the numerator and the denominator. Hence the transfer function is a biquadratic function. This circuit is a slight rearrangement of the state variable circuit. One significant difference is that there is not a separate highpass output. The bandpass output inverts the phase. There are two lowpass outputs, one in phase and one out of phase. With the addition of a fourth amplifier section, highpass, notch (lowpass, standard and highpass) and allpass filters can be realized. The design equations for the biquad are given in Figure 5-74.

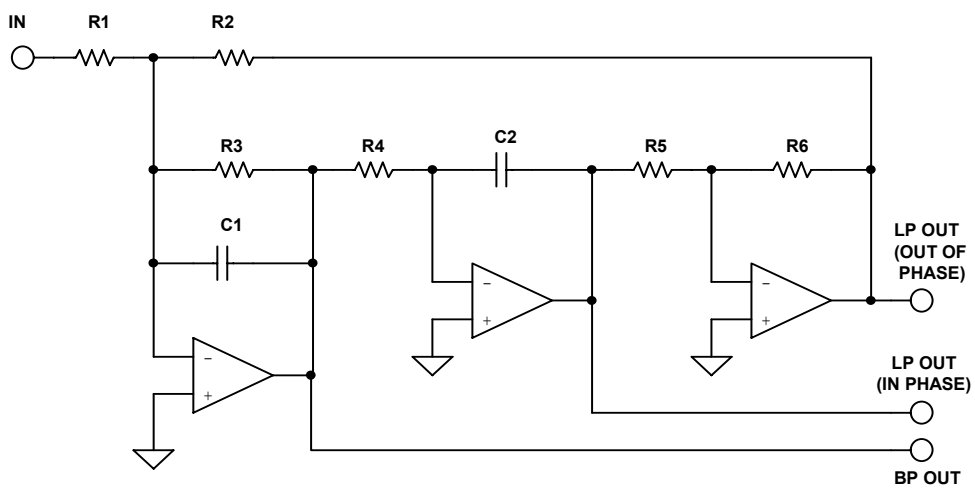

Figure 5-56: *Biquad filter*

Referring to Figure 5-74, the allpass case of the biquad, R8 = R9/2 and R7 = R9. This is required to make the terms in the transfer function line up correctly. For the highpass output, the input, bandpass and second lowpass outputs are summed. In this case the constraints are that R1 = R2 = R3 and R7 = R8 = R9.

Like the state variable, the biquad filter is tunable. Adjusting R3 will adjust the Q. Adjusting R4 will set the resonant frequency. Adjusting R1 will set the gain. Frequency would generally be adjusted first followed by Q and then gain. Setting the parameters in this manner minimizes the effects of component value interaction.

Dual Amplifier Bandpass (DAPB)

The Dual Amplifier bandpass filter structure is useful in designs requiring high Qs and high frequencies. Its component sensitivity is small, and the element spread is low. A useful feature of this circuit is that the Q and resonant frequency can be adjusted more or less independently.

Referring to Figure 5-57 below, the resonant frequency can be adjusted by R2. R1 can then be adjusted for Q. In this topology it is useful to use dual op amps. The match of the two op amps will lower the sensitivity of Q to the amplifier parameters.

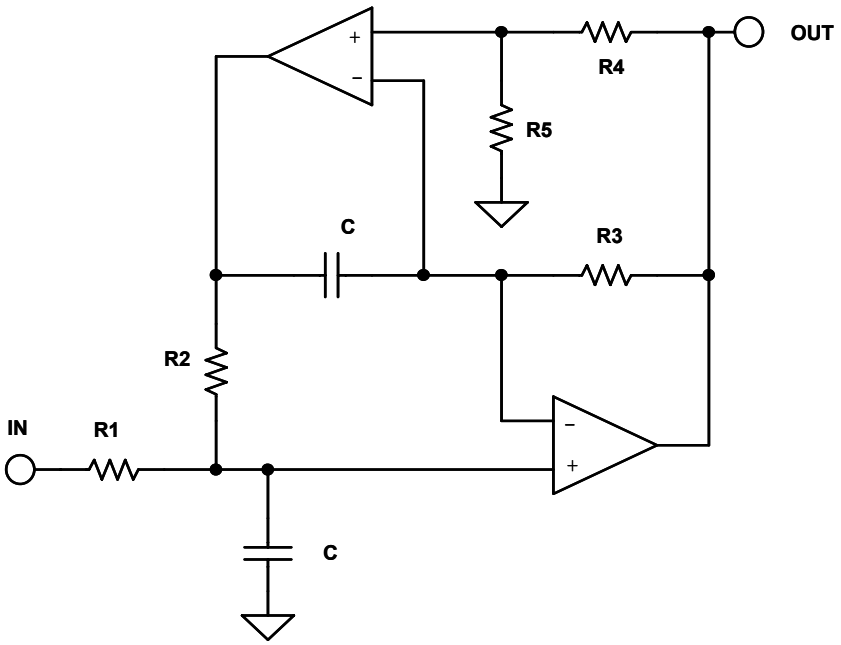

Figure 5-57: *Dual amplifier bandpass filter*

It should be noted that the DABP has a gain of 2 at resonance. If lower gain is required, resistor R1 may be split to form a voltage divider. This is reflected in the addendum to the design equations of the DABP, Figure 5-75.

Twin T Notch

The twin T is widely used as a general purpose notch circuit as shown in Figure 5-58. The passive implementation of the twin T (i.e. with no feedback) has a major shortcoming of having a Q that is fixed at 0.25. This issue can be rectified with the application of positive feedback to the reference node. The amount of the signal feedback, set by the R4/R5 ratio, will determine the value of Q of the circuit, which, in turn, determines the notch depth. For maximum notch depth, the resistors R4 and R5 and the associated op amp can be eliminated. In this case, the junction of C3 and R3 will be directly connected to the output.

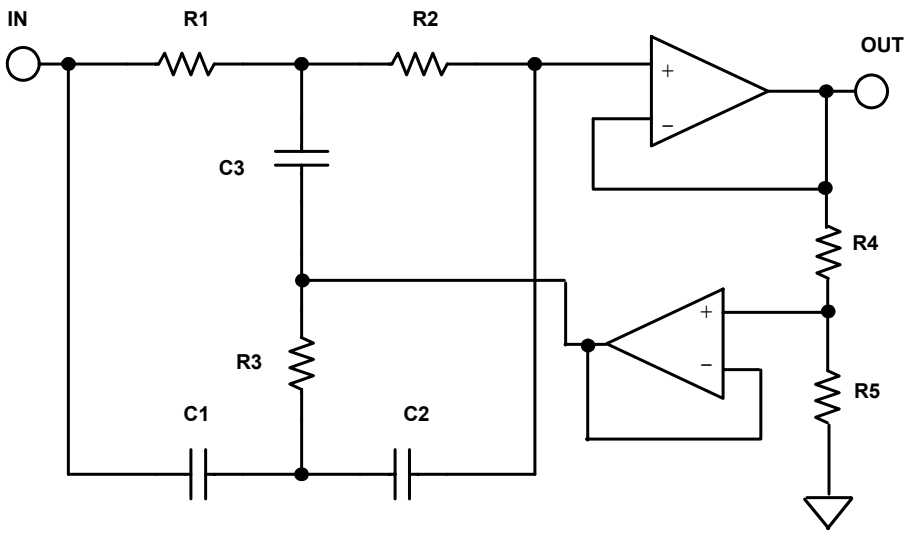

Figure 5-58: *Twin-T notch filter*

Tuning is not easily accomplished. Using standard 1% components a 60dB notch is as good as can be expected, with 40 –50dB being more typical.

The design equations for the Twin T are given in Figure 5-76.

Bainter Notch

A simple notch filter is the Bainter circuit (see Reference 21). It is composed of simple circuit blocks with two feedback loops as shown in Figure 5-59. Also, the component sensitivity is very low.

This circuit has several interesting properties. The Q of the notch is not based on component matching as it is in every other implementation, but is instead only dependant on the gain of the amplifiers. Therefore, the notch depth will not drift with temperature, aging and other environmental factors. The notch frequency may shift, but not the depth.

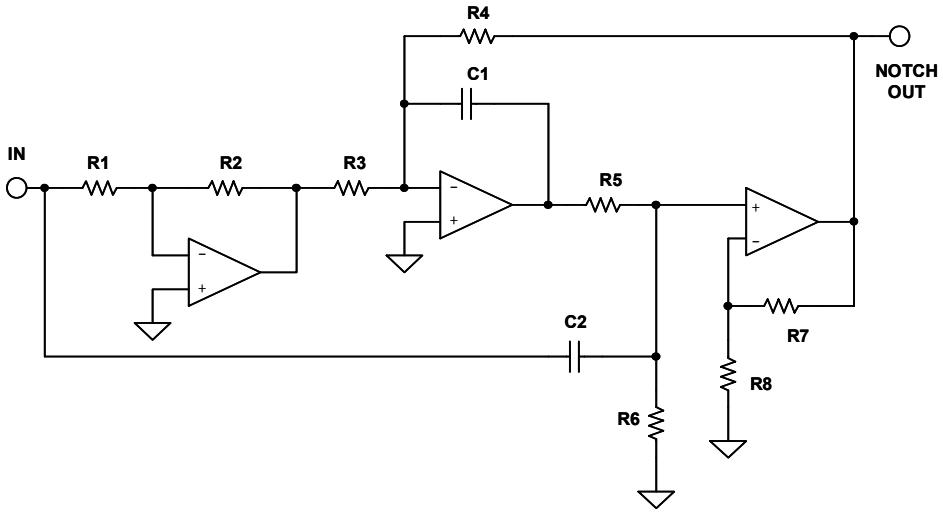

Figure 5-59: *Bainter notch filter*

Amplifier open loop gain of 10^4 will yield a Q_z of > 200. It is capable of orthogonal tuning with minimal interaction. R6 tunes Q and R1 tunes ω_Z. Varying R3 sets the ratio of ω_0/ω_Z produces lowpass notch (R4 > R3), notch (R4 = R3) or highpass notch (R4 < R3).

The design equations of the Bainter circuit are given in Figure 5-77.

Boctor Notch

The Boctor circuits (see References 22, 23), while moderately complicated, uses only one op amp. Due to the number of components, there is a great deal of latitude in component selection. These circuits also offer low sensitivity and the ability to tune the various parameters more or less independently.

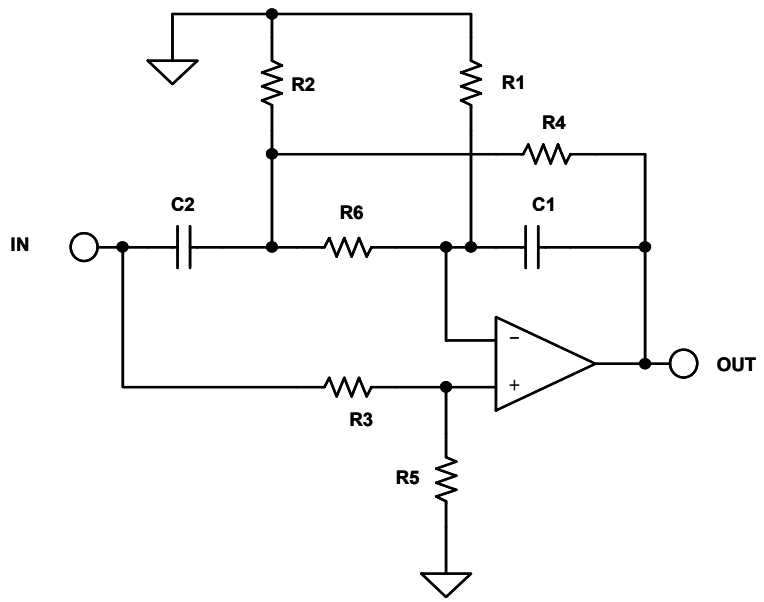

Figure 5-60: *Boctor lowpass notch filter*

There are two forms, a lowpass notch (Figure 5-60 above) and a highpass notch (Figure 5-61 below). For the lowpass case, the preferred order of adjustment is to tune ω_0 with R4, then Q_0 with R2, next Q_z with R3 and finally ω_z with R1.

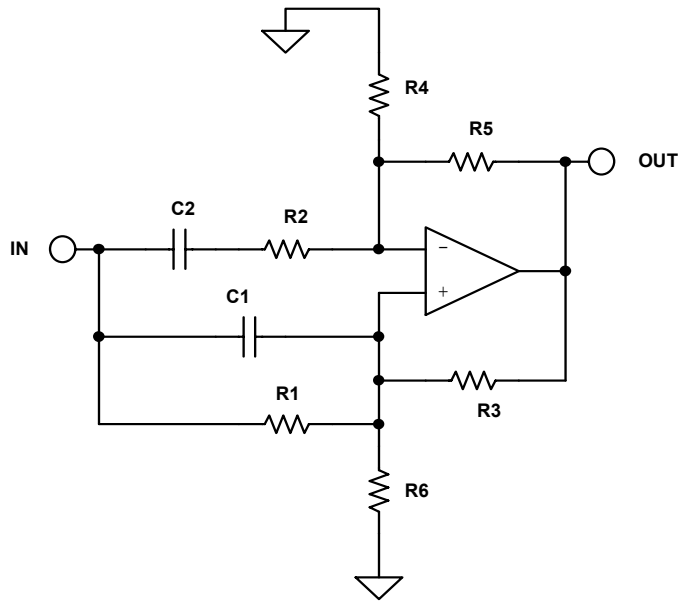

Figure 5-61: *Boctor highpass filter*

In order for the components to be realizable we must define a variable, k1, such that:

$$\frac{\omega_0^2}{\omega_z^2} < k1 < 1 \qquad \text{Eq. 5-90}$$

The design equations are given in Figure 5-78 for the lowpass case and in Figure 5-79 for the highpass case.

In the highpass case circuit gain is require and it applies only when

$$Q < \frac{1}{1 - \frac{\omega_z^2}{\omega_0^2}} \qquad \text{Eq. 5-91}$$

but a highpass notch can be realized with one amplifier and only 2 capacitors, which can be the same value. The pole and zero frequencies are completely independent of the amplifier gain. The resistors can be trimmed so that even 5% capacitors can be used.

"1 – Bandpass" Notch

As mentioned in the state variable and biquad sections, a notch filter can be built as 1 - BP. The bandpass section can be any of the all pole bandpass realizations discussed above, or any others. Keep in mind whether the bandpass section is inverting as shown in Figure 5-62 (such as the multiple feedback circuit) or non-inverting as shown in Figure 5-63 (such as the Sallen-Key), since we want to subtract, not add, the bandpass output from the input.

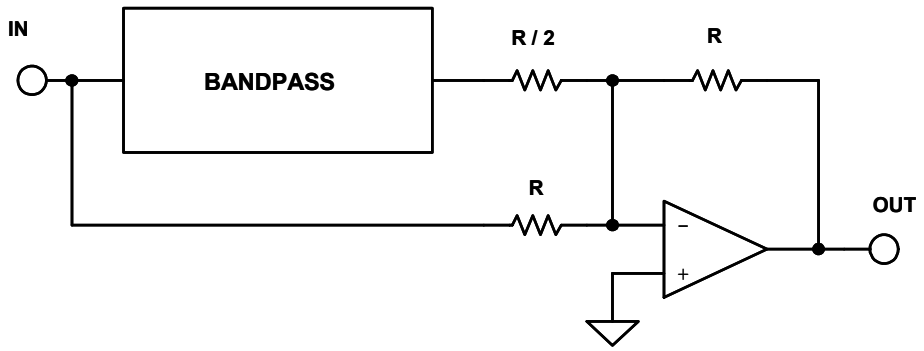

Figure 5-62: *1 – BP filter for inverting bandpass configurations*

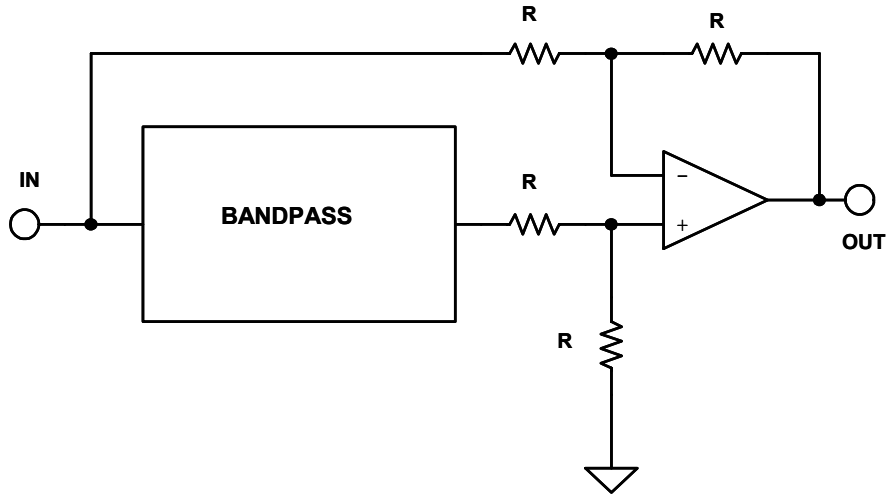

Figure 5-63: *1 – BP filter for noninverting bandpass configurations*

It should be noted that the gain of the bandpass amplifier must be taken into account in determining the resistor values. Unity gain bandpass would yield equal values.

First Order Allpass

The general form of a first order allpass filter is shown in Figure 5-64. If the function is a simple RC highpass (Figure 5-64A), the circuit will have a have a phase shift that goes from -180° at 0Hz. and 0°at high frequency. It will be -90° at $\omega = 1/RC$. The resistor may be made variable to allow adjustment of the delay at a particular frequency.

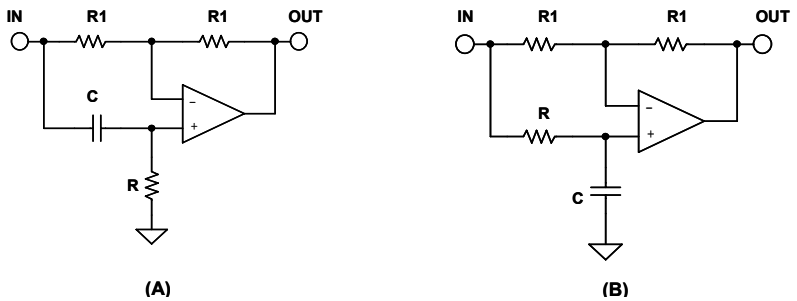

Figure 5-64: *First order allpass filters*

If the function is changed to a lowpass function (Figure 5-64B), the filter is still a first order allpass and the delay equations still hold, but the signal is inverted, changing from 0° at DC to –180° at high frequency.

Second Order Allpass

A second order allpass circuit shown in Figure 5-65 was first described by Delyiannis (see Reference 17). The main attraction of this circuit is that it only requires one op amp. Remember also that an allpass filter can also be realized as 1 – 2BP.

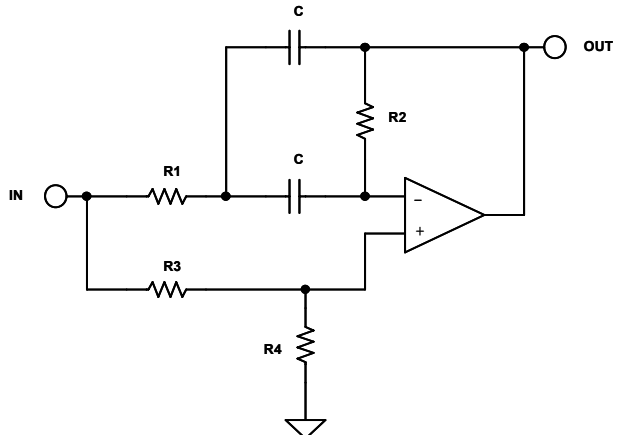

Figure 5-65: *Second order allpass filter*

We may use any of the all pole realizations discussed above to build the filter, but you need to be aware of whether the BP inverts the phase or not. We must also be aware that the gain of the BP section must be 2. To this end, the DABP structure is particularly useful, since its gain is fixed at 2.

Figures 5-66 through 5-81 following summarize design equations for various active filter realizations. In all cases, H, ω_o, Q, and α are given, being taken from the design tables.

SINGLE POLE

LOWPASS

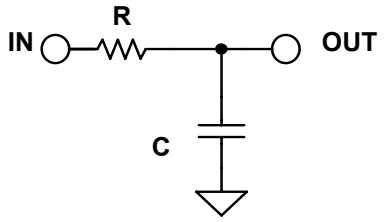

$$\frac{V_O}{V_{IN}} = \frac{1}{sC\,R + 1}$$

$$F_o = \frac{1}{2\pi\,R\,C}$$

HIGHPASS

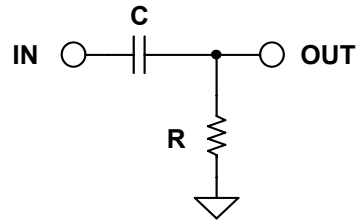

$$\frac{V_O}{V_{IN}} = \frac{sC\,R}{sC\,R + 1}$$

$$F_o = \frac{1}{2\pi\,R\,C}$$

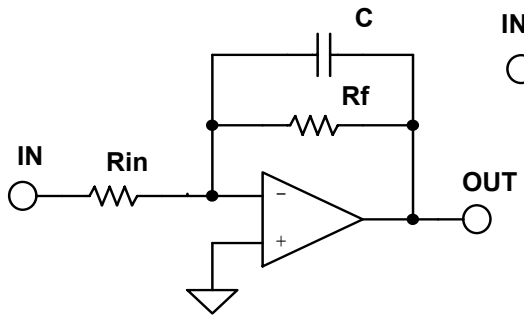

$$\frac{V_O}{V_{IN}} = -\frac{Rf}{Rin}\,\frac{1}{sC\,R2 + 1}$$

$$H_o = -\frac{Rf}{Rin}$$

$$F_o = \frac{1}{2\pi\,Rf\,C}$$

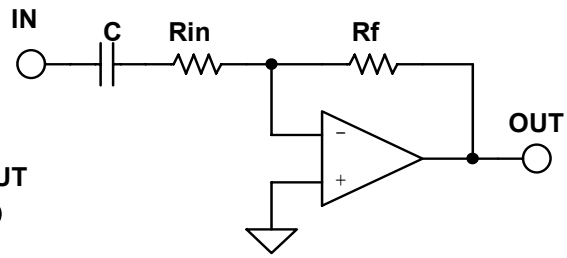

$$\frac{V_O}{V_{IN}} = -\frac{Rf}{Rin}\,\frac{sC\,R1}{sC\,R1 + 1}$$

$$H_o = -\frac{Rf}{Rin}$$

$$F_o = \frac{1}{2\pi\,Rin\,C}$$

Figure 5-66: *Single pole filter design equations*

SALLEN-KEY LOWPASS

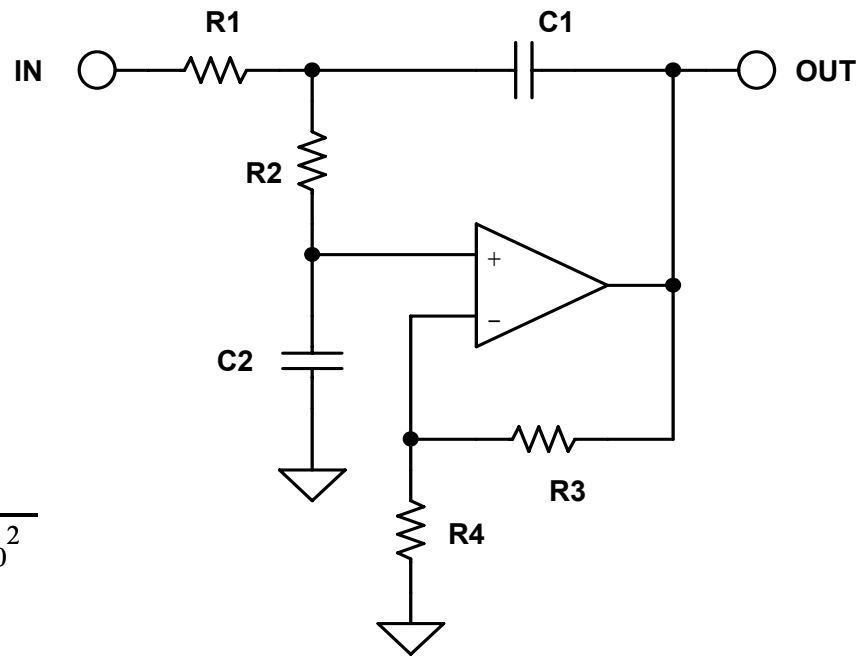

$$\frac{+H\,\omega_0^2}{s^2 + \alpha\,\omega_0\,s + \omega_0^2}$$

$$\frac{V_O}{V_{IN}} = \frac{H\,\dfrac{1}{R1\,R2\,C1\,C2}}{s^2 + s\left[\dfrac{C2}{R1} + \dfrac{C2}{R2} + (1\text{-}H)\dfrac{C1}{R2}\right] + \dfrac{1}{R1\,R2\,C1\,C2}}$$

CHOOSE: C1 R3

THEN:

$k = 2\,\pi\,F_O\,C1$

$m = \dfrac{\alpha^2}{4} + (H\text{-}1)$

$C2 = m\,C1$

$R1 = \dfrac{2}{\alpha k}$

$R2 = \dfrac{\alpha}{2mk}$

$R4 = \dfrac{R3}{(H\text{-}1)}$

Figure 5-67: *Sallen-Key lowpass design equations*

SALLEN-KEY HIGHPASS

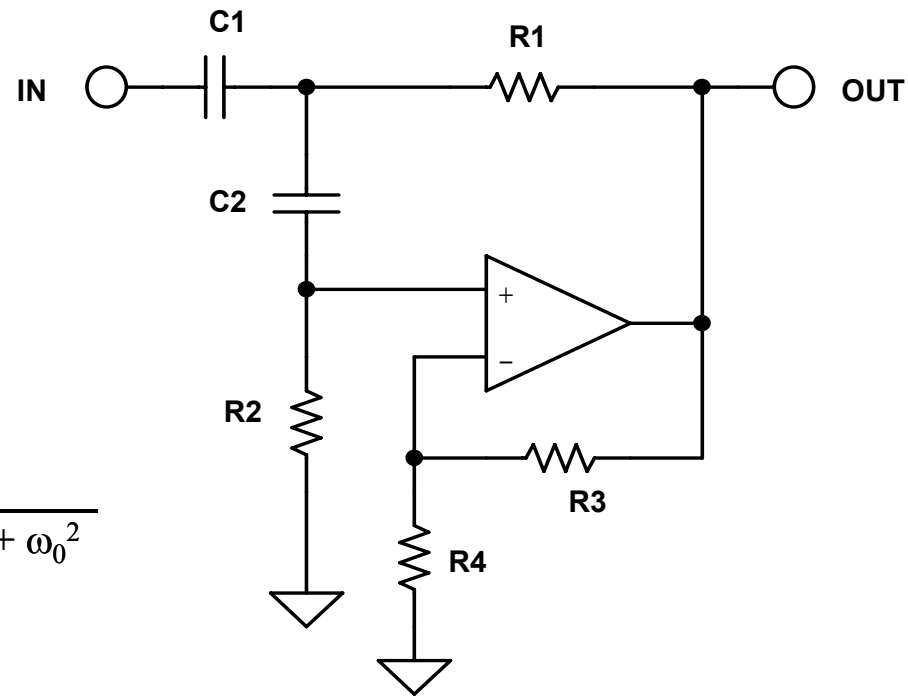

$$\frac{+H\,s^2}{s^2 + \alpha\,\omega_0\,s + \omega_0^2}$$

$$\frac{V_O}{V_{IN}} = \frac{H\,s^2}{s^2 + s\left[\dfrac{\dfrac{C2}{R2} + \dfrac{C1}{R2} + (1\text{-}H)\dfrac{C2}{R1}}{C1\,C2}\right] + \dfrac{1}{R1\,R2\,C1\,C2}}$$

CHOOSE: C1 R3

THEN: $k = 2\,\pi\,F_O\,C1$ $\qquad R4 = \dfrac{R3}{(H\text{-}1)}$

$C2 = C1$

$$R1 = \frac{\alpha + \sqrt{\alpha^2 + (H\text{-}1)}}{4\,k}$$

$$R2 = \frac{4}{\alpha + \sqrt{\alpha^2 + (H\text{-}1)}} * \frac{1}{k}$$

Figure 5-68: *Sallen-Key highpass design equations*

SALLEN-KEY BANDPASS

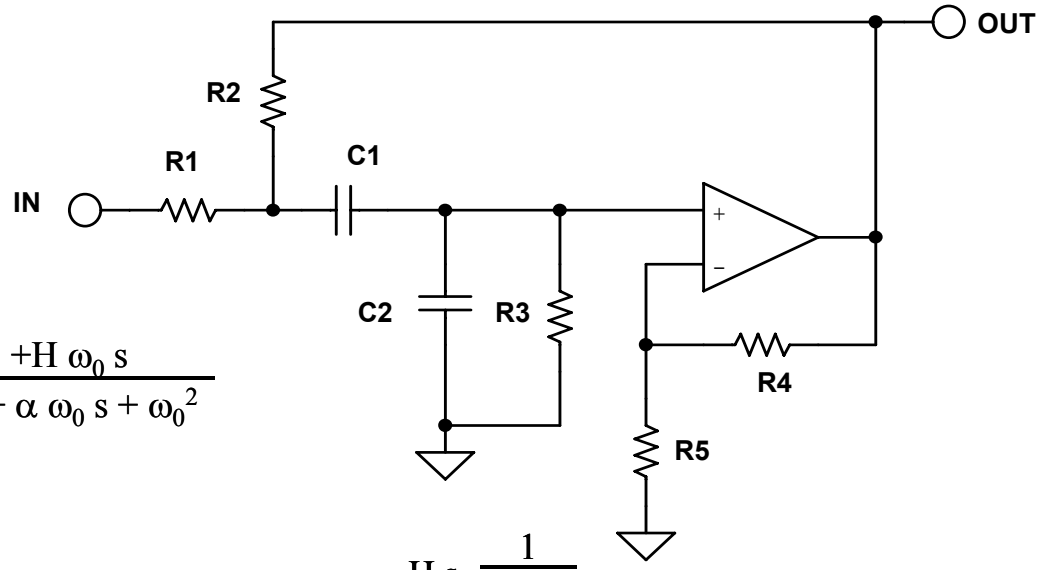

$$\frac{+H\,\omega_0\,s}{s^2 + \alpha\,\omega_0\,s + \omega_0^2}$$

$$\frac{V_O}{V_{IN}} = \frac{H\,s\,\dfrac{1}{R1C2}}{s^2 + s\left[\dfrac{\dfrac{C1}{R3} + \dfrac{(C1+C2)}{R1} + \dfrac{C2}{R2} + \dfrac{C1}{R2}}{C1\,C2}\right] + \dfrac{1}{R3\,C1\,C2}\left(\dfrac{R1+R2}{R1\,R2}\right)}$$

CHOOSE: C1 R4

THEN:

$$k = 2\,\pi\,F_O\,C1$$

$$C2 = \frac{1}{2}\,C1$$

$$R1 = \frac{2}{k}$$

$$R2 = \frac{2}{3\,k}$$

$$R3 = \frac{4}{k}$$

$$H = \frac{1}{3}\left(6.5 - \frac{1}{Q}\right)$$

$$R5 = \frac{R4}{(H-1)}$$

Figure 5-69: *Sallen-Key bandpass design equations*

MULTIPLE FEEDBACK LOWPASS

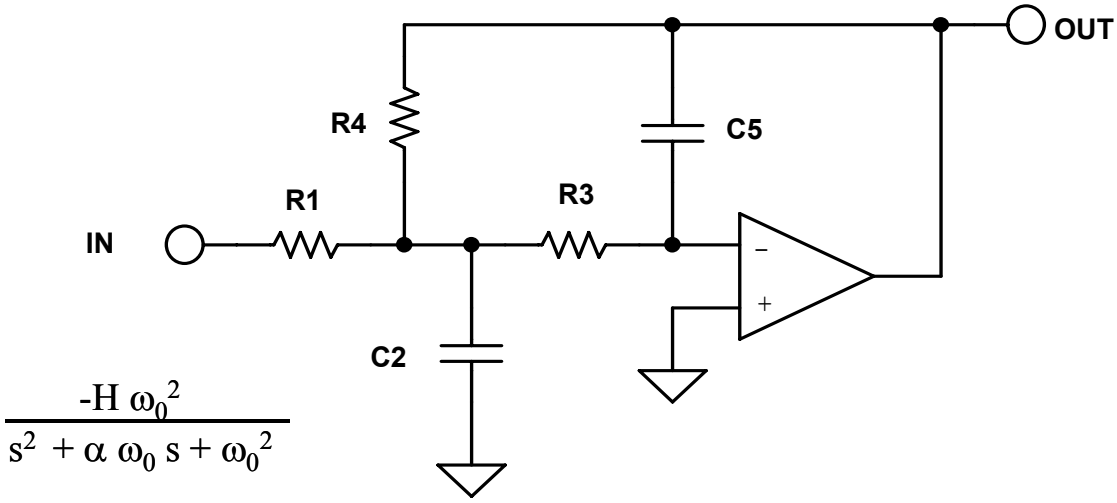

$$\frac{-H\,\omega_0^2}{s^2 + \alpha\,\omega_0\,s + \omega_0^2}$$

$$\frac{V_O}{V_{IN}} = \frac{-H\dfrac{1}{R3\,R4\,C2\,C5}}{s^2 + s\,\dfrac{1}{C2}\left(\dfrac{1}{R1} + \dfrac{1}{R3} + \dfrac{1}{R4}\right) + \dfrac{1}{R3\,R4\,C2\,C5}}$$

CHOOSE: C5

THEN: $k = 2\,\pi\,F_O\,C5$

$$C2 = \frac{4}{\alpha^2}\,(H + 1)\,C5$$

$$R1 = \frac{\alpha}{2\,H\,k}$$

$$R3 = \frac{\alpha}{2\,(H + 1)\,k}$$

$$R4 = \frac{\alpha}{2\,k}$$

Figure 5-70: *Multiple feedback lowpass design equations*

MULTIPLE FEEDBACK HIGHPASS

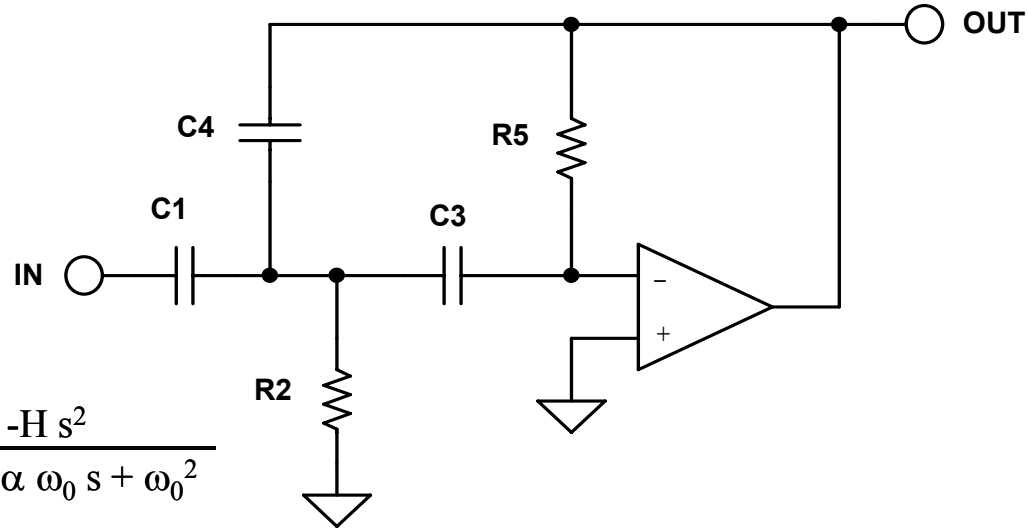

$$\frac{-H\,s^2}{s^2 + \alpha\,\omega_0\,s + \omega_0^2}$$

$$\frac{V_O}{V_{IN}} = \frac{-\,s^2\,\dfrac{C1}{C4}}{s^2 + s\,\dfrac{(C1 + C3 + C4)}{C3\,C4\,R5} + \dfrac{1}{R2\,R5\,C3\,C4}}$$

CHOOSE: C1

THEN: $k = 2\,\pi\,F_O\,C1$

$$C3 = C1$$

$$C4 = \frac{C1}{H}$$

$$R2 = \frac{\alpha}{k\left(2 + \dfrac{1}{H}\right)}$$

$$R5 = \frac{H\left(2 + \dfrac{1}{H}\right)}{\alpha\,k}$$

Figure 5-71: *Multiple feedback highpass design equations*

MULTIPLE FEEDBACK BANDPASS

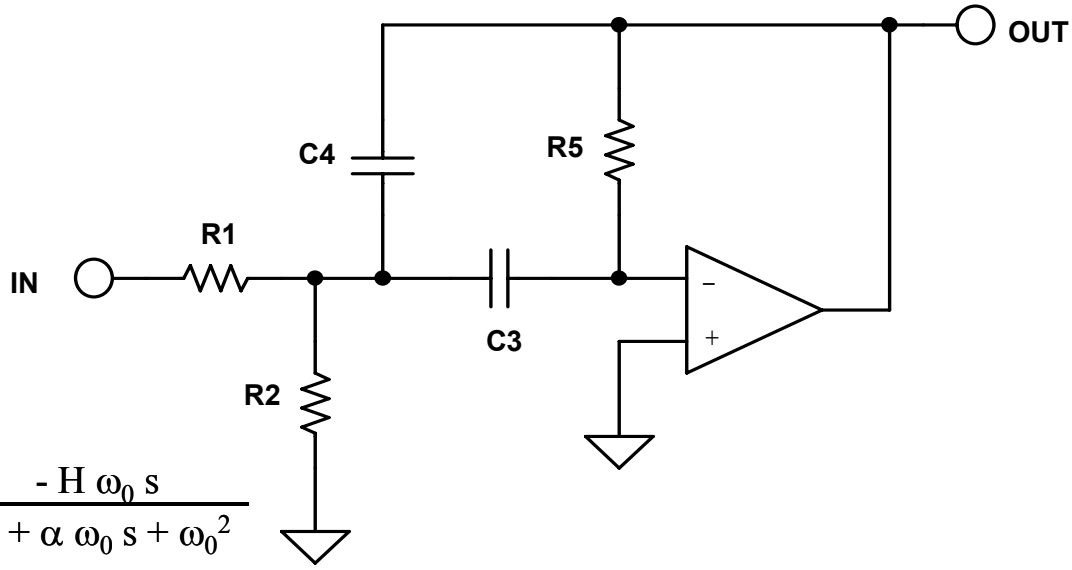

$$\frac{-H\,\omega_0\,s}{s^2 + \alpha\,\omega_0\,s + \omega_0^2}$$

$$\frac{V_O}{V_{IN}} = \frac{-s\,\dfrac{1}{R1\,C4}}{s^2 + s\,\dfrac{(C3 + C4)}{C3\,C4\,R5} + \dfrac{1}{R5\,C3\,C4}\left(\dfrac{1}{R1} + \dfrac{1}{R2}\right)}$$

CHOOSE: C3

THEN: $k = 2\,\pi\,F_O\,C3$

$C4 = C3$

$R1 = \dfrac{1}{H\,k}$

$R2 = \dfrac{1}{(2Q - H)\,k}$

$R5 = \dfrac{2Q}{k}$

Figure 5-72: *Multiple feedback bandpass design equations*

STATE VARIABLE (A)

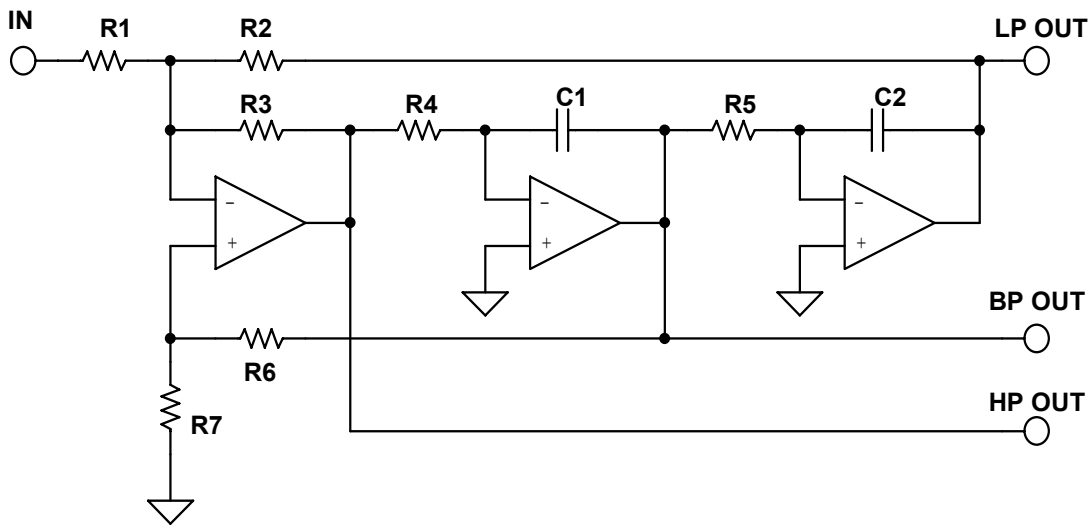

$$A_{LP\ (s=0)} = -\frac{R2}{R1}$$

$$A_{HP\ (s=\infty)} = -\frac{R3}{R1}$$

$$\omega_0 = \sqrt{\frac{R3}{R2\ R4\ R5\ C1\ C2}}$$

LET R4 = R5 = R, C1 = C2 = C

$$A_{BP\ (s=\omega_0)} = \frac{\frac{R6+R7}{R7}}{R1\left(\frac{1}{R1}+\frac{1}{R2}+\frac{1}{R3}\right)}$$

CHOOSE R1:

$$R2 = A_{LP}\ R1$$
$$R3 = A_{HP}\ R1$$

CHOOSE C:

$$R = \frac{2\ \pi\ F_O}{C}\sqrt{\frac{A_{HP}}{A_{LP}}}$$

CHOOSE R7:

$$R6 = R7\ \sqrt{R2\ R3}\ Q\left(\frac{1}{\frac{1}{R1}+\frac{1}{R2}+\frac{1}{R3}}\right)$$

Figure 5-73A: *State variable design equations*

STATE VARIABLE (B)

FOR NOTCH:

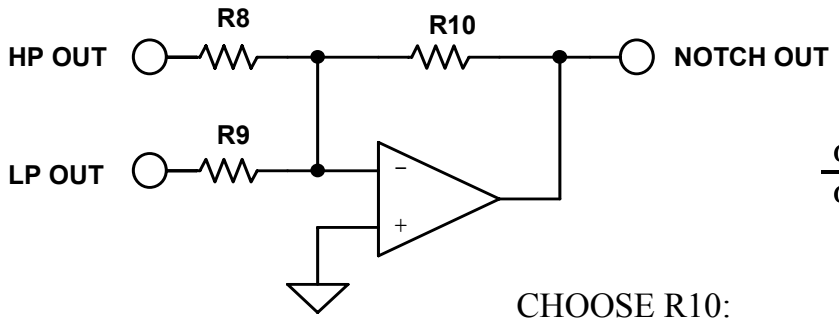

$$\frac{\omega_Z^2}{\omega_O^2} = \frac{R9\ R2}{R8\ R3}$$

CHOOSE R10:

CHOOSE A_{HP}, A_{LP}, A_{NOTCH} = 1:

FOR $\omega_Z = \omega_O$: R8 = R9 = R10

FOR $\omega_Z < \omega_O$: R9 = R10

$$R8 = \frac{\omega_0^2}{\omega_Z^2} R10$$

FOR $\omega_Z > \omega_O$: R8 = R10

$$R9 = \frac{\omega_Z^2}{\omega_0^2} R10$$

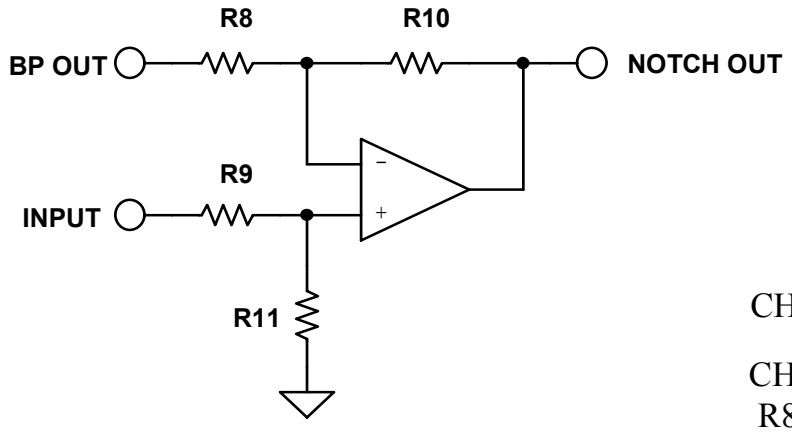

CHOOSE A_{NOTCH} = 1:

CHOOSE R10:
R8 = R9 = R11 = R10

Figure 5-73B: *State variable design equations*

STATE VARIABLE (C)

ALLPASS

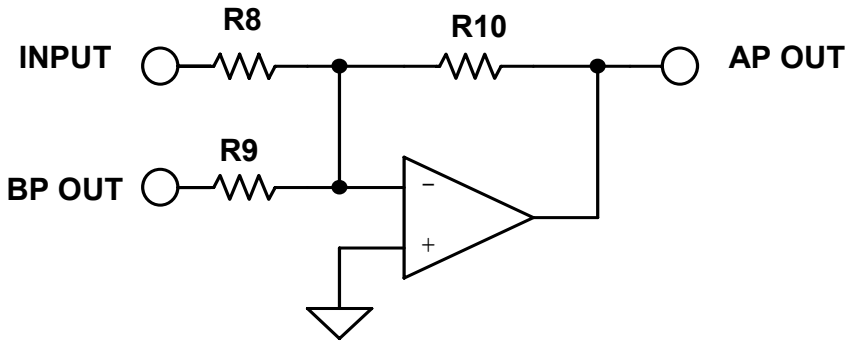

H = 1

R8 = R10

R9 = R8/2

Figure 7-73C: *State variable design equations*

BIQUADRATIC (A)

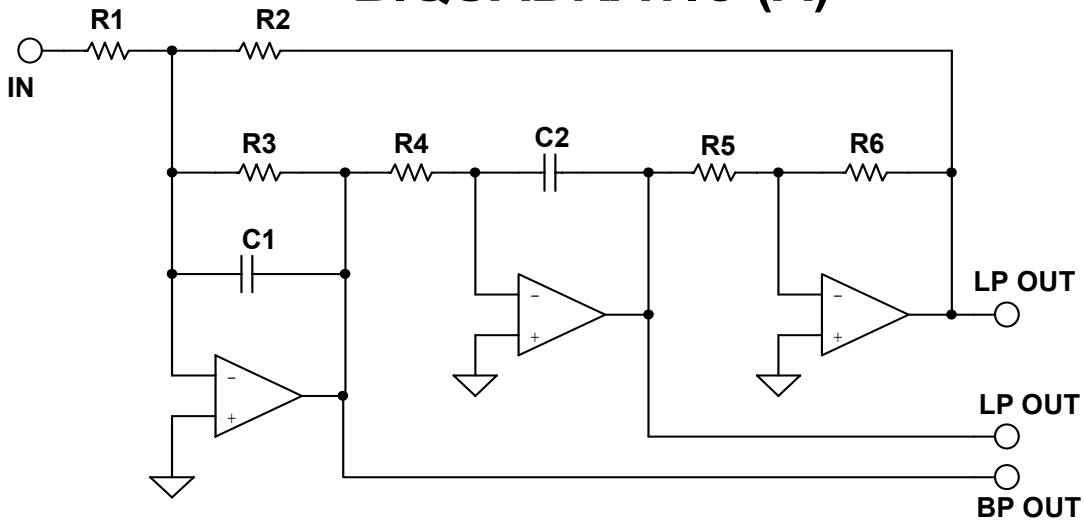

CHOOSE C, R2, R5

$K = 2\pi f_0 C$

$C1 = C2 = C$

$R1 = \frac{R2}{H}$

$R3 = \frac{1}{k\alpha}$

$R4 = \frac{1}{k^2 R2}$

CHOOSE C, R5, R7

$K = 2\pi f_0 C$

$C1 = C2 = C$

$R1 = R2 = R3 = \frac{1}{k\alpha}$

$R4 = \frac{1}{k^2 R2}$

$R6 = R5$

HIGHPASS

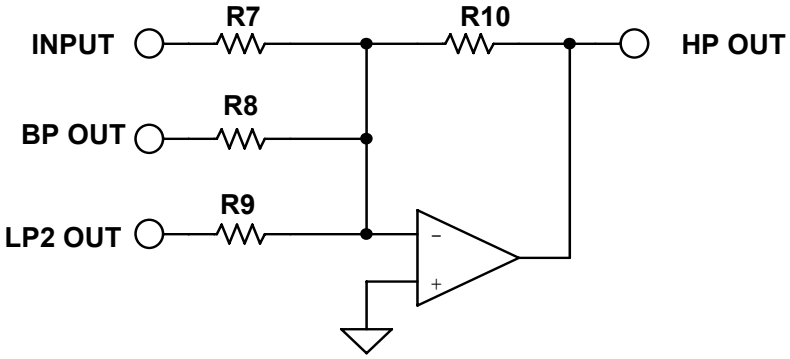

$R7 = R8 = R9 = R$

$R10 = \frac{R}{H}$

Figure 5-74A: *Biquad design equations*

BIQUADRATIC (B)

NOTCH

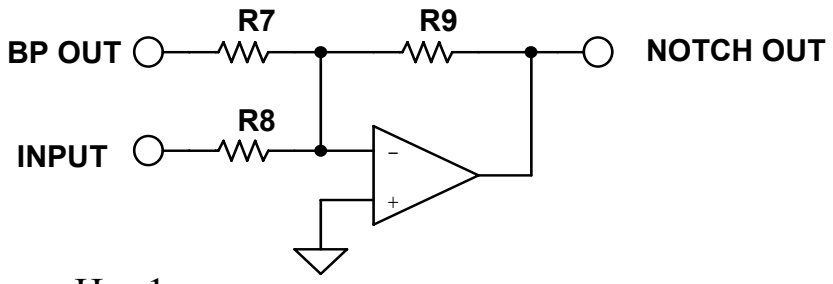

H = 1

R7 = R8 = R9

ALLPASS

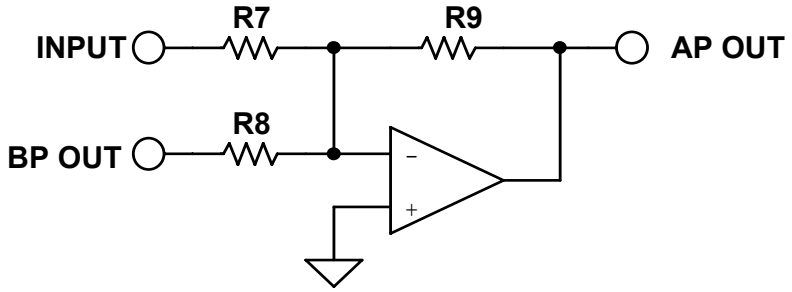

H = 1

R7 = R9

R8 = R7/2

Figure 5-74B: *Biquad design equations*

DUAL AMPLIFIER BANDPASS

$$\frac{+H\,\omega_0\,s}{s^2 + \alpha\,\omega_0\,s + \omega_0^2}$$

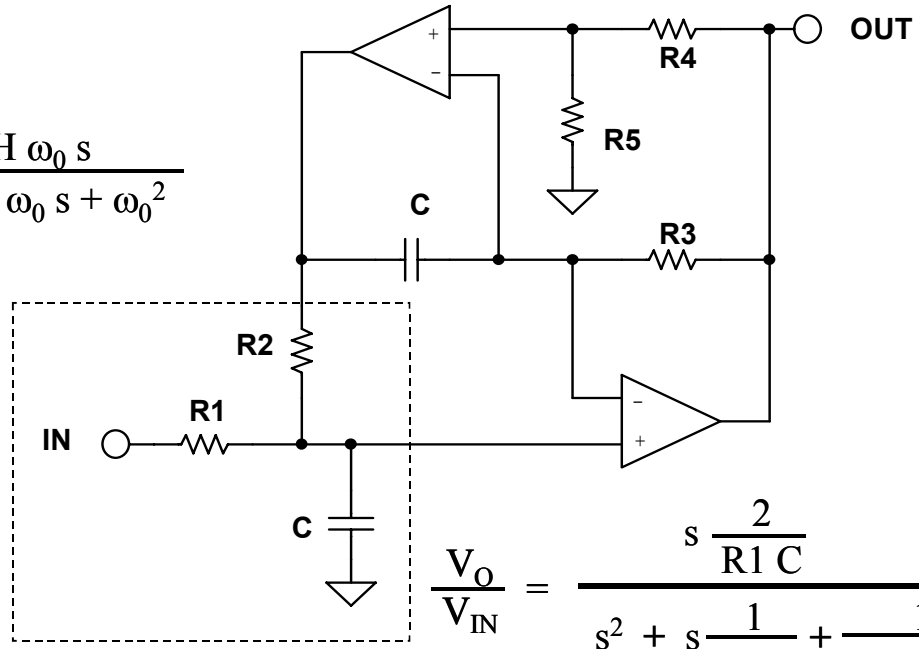

$$\frac{V_O}{V_{IN}} = \frac{s\,\dfrac{2}{R1\,C}}{s^2 + s\,\dfrac{1}{R1\,C} + \dfrac{1}{R2\,R3\,C^2}}$$

CHOOSE: C R4

THEN:

$$R = \frac{1}{2\,\pi\,F_0\,C}$$

R5 = R4

$$R1 = Q\,R$$

$$R2 = R3 = R$$

FOR GAINS LESS THAN 2 (GAIN = A_V):

$$R1A = \frac{2R1}{A_V}$$

$$R1B = \frac{R1A\;A_V}{2 - A_V}$$

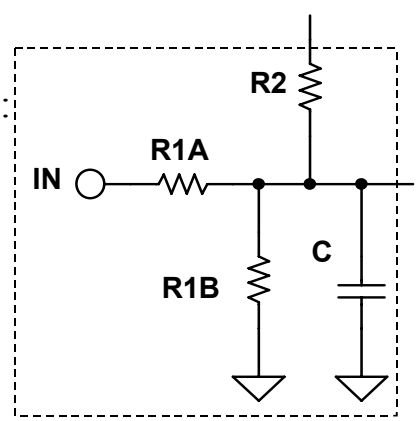

Figure 5-75: *Dual amplifier bandpass design equations*

TWIN T NOTCH

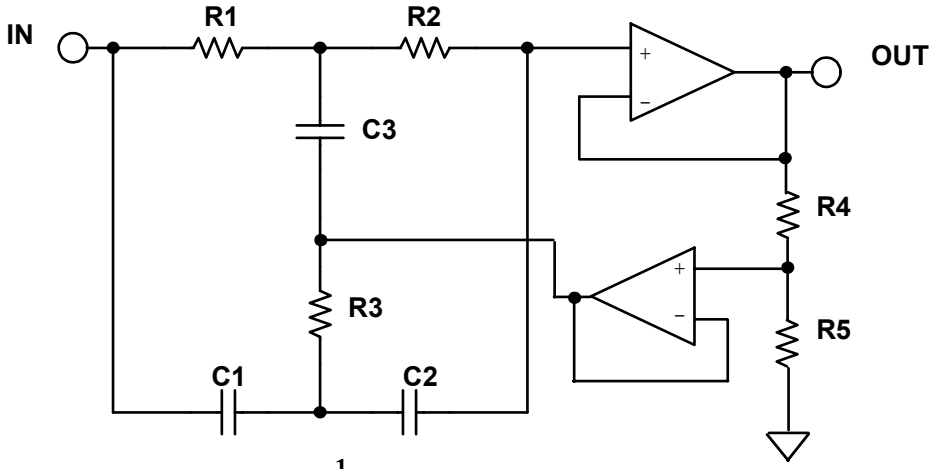

$$\frac{V_0}{V_{IN}} = \frac{s^2 + \frac{1}{R\,C}}{s^2 + \frac{1}{R\,C}\,4\left(1 - \frac{R5}{R4 + R5}\right)s + \frac{1}{R\,C}} \qquad \frac{s^2 + \omega_0^2}{s^2 + 4\omega_0(1\text{-}K)s + \omega_0^2}$$

CHOOSE: C R'

$k = 2\,\pi\,F_0\,C$

$R = \frac{1}{k}$

$R = R1 = R2 = 2\,R3$

$C = C1 = C2 = \frac{C3}{2}$

$F_0 = \frac{1}{2\,\pi\,R\,C}$

$R4 = (1 - K)\,R'$

$R5 = K\,R'$

$K = 1 - \frac{1}{4Q}$

for K = 1, eliminate R4 and R5
(i.e R5 → 0, Q → ∞)
for R >> R4, eliminate buffer

Figure 5-76: *Twin-T notch design equations*

BAINTER NOTCH

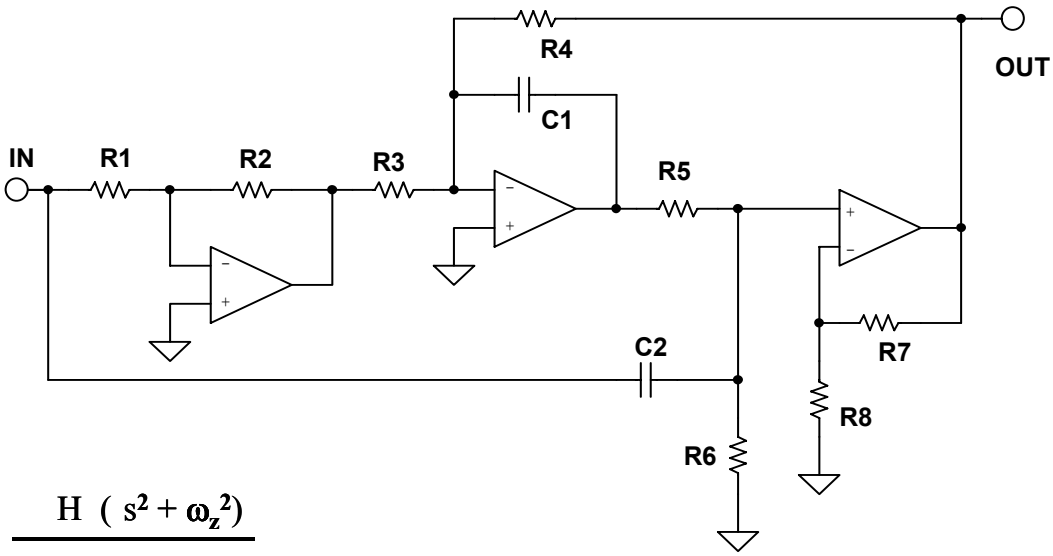

$$\frac{H\ (s^2 + \omega_z^2)}{s^2 + \frac{\omega_0}{Q}s + \omega_0^2}$$

$$\frac{V_{OUT}}{V_{IN}} = \frac{K2 * \left[S^2 + \frac{K1}{R3\ R5\ C1\ C2}\right]}{s^2 + \frac{(R5 + R6)}{R5\ R6\ C2}\ s + \frac{K2}{R4\ R5\ C1\ C2}}$$

CHOOSE C1, R1,R7,K1, K2

$C2 = C1 = C$

$k = 2\ \pi\ F_O\ C$

$R2 = K1 * R1$

$Z = \left(\frac{\omega_Z}{\omega_0}\right)^2$

$R3 = \frac{K1}{2\ Z\ Q\ k}$

$R4 = \frac{K2}{2\ Q\ k}$

$R5 = R6 = \frac{2\ Q}{k}$

$R8 = (K2 - 1)\ R7$

Figure 5-77: *Bainter notch*

BOCTOR NOTCH

LOWPASS

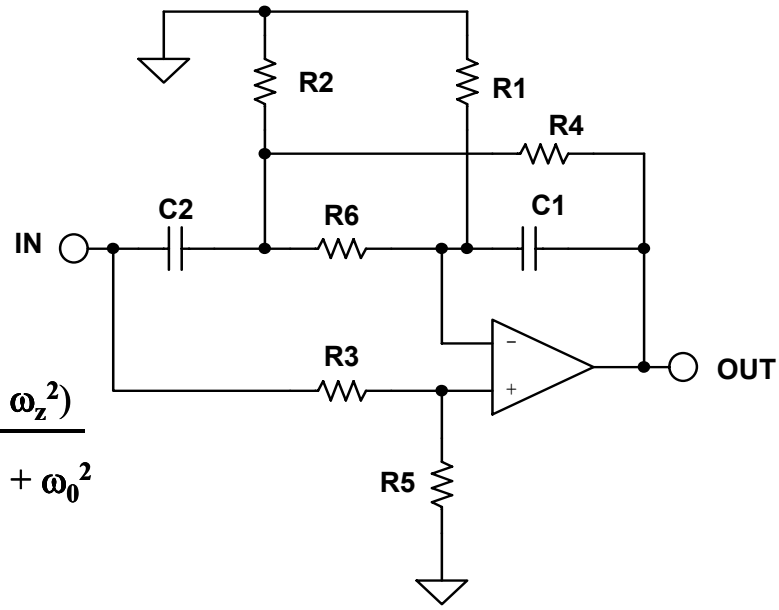

$$\frac{H\ (s^2 + \omega_z^2)}{s^2 + \frac{\omega_0}{Q} s + \omega_0^2}$$

$$\frac{V_{OUT}}{V_{IN}} = H \frac{s^2 + \frac{R1 + (R2||R4) + R6}{R1\ (R2||R4)\ R6\ C1\ C2}}{s^2 + \left(\frac{1}{R6\ C2} + \frac{1}{(R2||R4)\ C2}\right) s + \frac{1}{R4\ R6\ C1\ C2}}$$

GIVEN ω_0, ω_Z, Q_0

CHOOSE R6 R5 C1

$$R4 = \frac{1}{\omega_0\, C1\ 2Q_0} \qquad R3 = \left(\frac{R6}{R1} + 2\,\frac{C1}{C2}\right) R5$$

$$R2 = \frac{R4\ R6}{R4 + R6} \qquad C2 = 4\ Q_0^2\ \frac{R4}{R6}\ C1$$

$$R1 = \frac{1}{2}\left(\frac{R6}{R4}\ \frac{\omega_Z^2}{\omega_0^2} - 1\right)$$

Figure 5-78: *Boctor notch, lowpass*

BOCTOR NOTCH

HIGHPASS (A)

$$\frac{H\,(s^2 + \omega_z^2)}{s^2 + \frac{\omega_0}{Q}s + \omega_0^2}$$

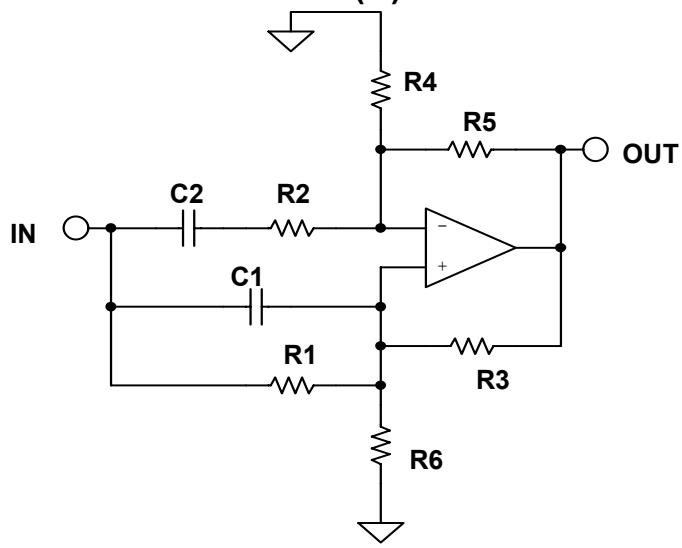

$$Q < \frac{1}{1 - \frac{F_Z^2}{F_0^2}}$$

$$\frac{V_{OUT}}{V_{IN}} = \frac{\left(1 + \frac{R5}{R4}\right)\left(s^2 + \frac{1}{R1\,R2\,C1\,C2}\right)}{s^2 + \left[\frac{1}{R_{EQ1}\,C1}\left(1 - \frac{R_{EQ1}\,R_{EQ2}}{R1\,R2}\right)\right]s + \frac{1}{R_{EQ1}\,R_{EQ2}\,C1\,C2}}$$

WHERE: $R_{EQ1} = R1 \parallel R3 \parallel R6$
$R_{EQ2} = R2 + (R4 \parallel R5)$

GIVEN: $F_Z\ F_0\ H$ or $F_Z\ Q\ H$

$$Q = \frac{1}{\sqrt{2\left(\frac{F_Z^2}{F_0^2} - 1\right)}} \qquad F_0 = F_Z\sqrt{\frac{1}{1 - \frac{1}{2Q^2}}}$$

$$Y = \frac{1}{Q\left(1 - \frac{F_Z^2}{F_0^2}\right)}$$

Figure 5-79A: *Boctor highpass design equations*

BOCTOR NOTCH

HIGHPASS (B)

GIVEN: C, R2, R3

$C1 = C2 = C$

$$R_{EQ1} = \frac{1}{C\ Y\ 2\pi\ F_0}$$

$$R_{EQ2} = Y^2\ R_{EQ1}$$

$$R4 = R_{EQ2} - R2\left(\frac{H}{H-1}\right)$$

$$R5 = (H-1)\ R4$$

$$R1 = \frac{1}{(2\pi\ F_0)^2\ R2\ C^2}$$

$R6 = REQ1$

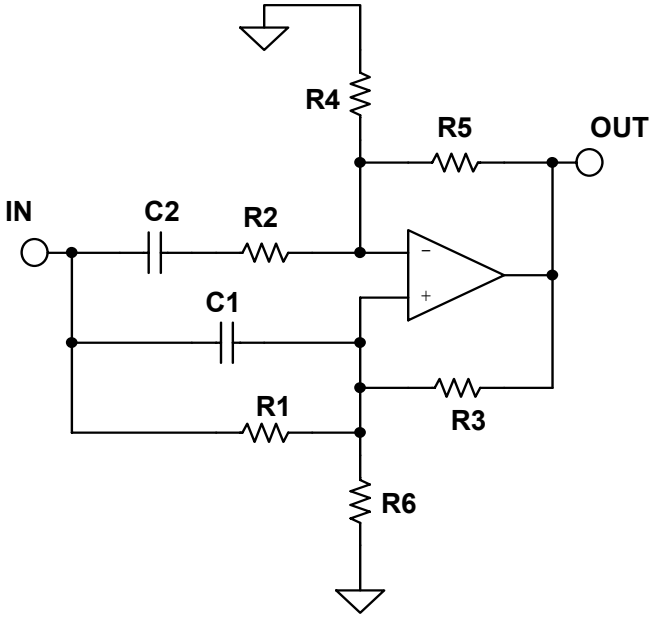

Figure 5-79-B: *Boctor highpass design equations (continued)*

FIRST ORDER ALLPASS

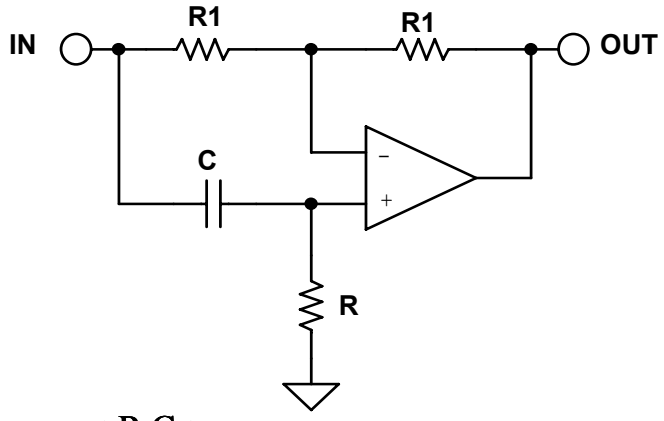

$$\frac{V_O}{V_{IN}} = \frac{s - \frac{1}{RC}}{s + \frac{1}{RC}}$$

$$\text{PHASE SHIFT } (\phi) = -2\,\text{TAN}^{-1}\left(\frac{R\,C}{2\,\pi\,F}\right)$$

$$\text{GROUP DELAY} = \frac{2\,R\,C}{(2\,\pi\,F\,R\,C)^2 + 1}$$

DELAY AT DC = 2 R C

GIVEN A PHASE SHIFT OF ϕ AT A FREQUENCY = F

$$R\,C = 2\,\pi\,F\,\text{TAN}\left(-\frac{\phi}{2}\right)$$

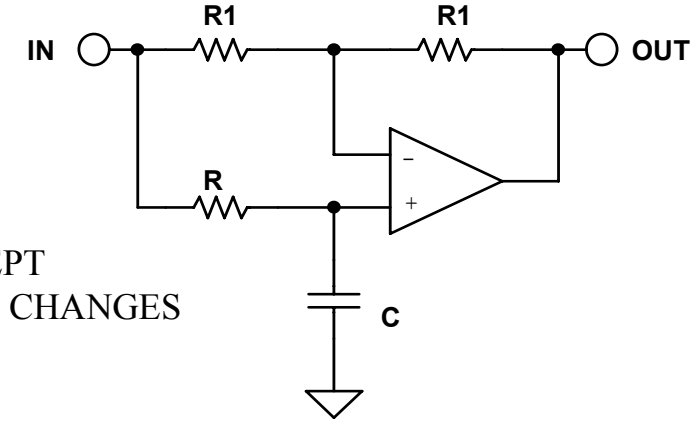

DESIGN AS ABOVE EXCEPT
THE SIGN OF THE PHASE CHANGES

Figure 5-80: *First order allpass design equations*

SECOND ORDER ALLPASS

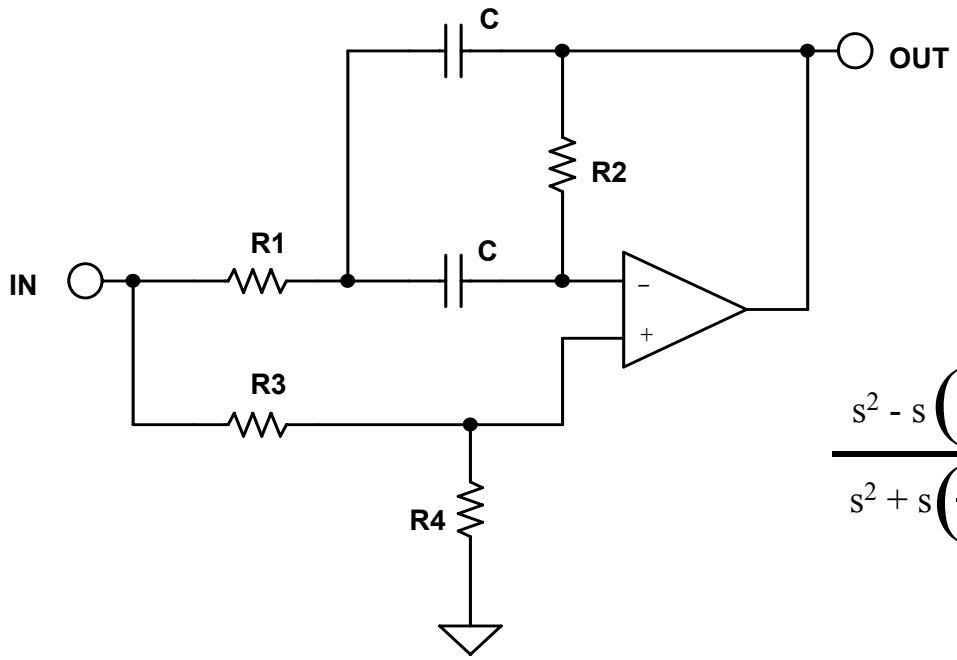

$$\frac{s^2 - s\left(\frac{\omega_0}{Q}\right) + \omega_0^2}{s^2 + s\left(\frac{\omega_0}{Q}\right) + \omega_0^2}$$

$$\frac{V_0}{V_{IN}} = \frac{s^2 - s\left(\frac{2}{R2\ C}\right) + \frac{1}{R1\ R2\ C^2}}{s^2 + s\left(\frac{2}{R2\ C}\right) + \frac{1}{R1\ R2\ C^2}}$$

CHOOSE: C

$$k = 2\ \pi\ F_0\ C$$

$$R2 = \frac{2\ Q}{k}$$

$$R1 = \frac{1}{2\ k\ Q}$$

$$R3 = R1$$

$$R4 = \frac{Q}{2}$$

Figure 5-81: *Second order allpass*

SECTION 5-7: PRACTICAL PROBLEMS IN FILTER IMPLEMENTATION

In the previous sections filters were dealt with as mathematical functions. The filter designs were assumed to have been implemented with "perfect" components. When the filter is built with real-world components design tradeoffs must typically be made.

In building a filter with an order greater the two, multiple second and/or first order sections are used. The frequencies and Qs of these sections must align precisely or the overall response of the filter will be affected. For example, the antialiasing filter design example in the next section is a 5th order Butterworth filter, made up of a second order section with a frequency (Fo) = 1 and a Q = 1.618, a second order section with a frequency (Fo) = 1 and a Q = 0.618, and a first order section with a frequency (Fo) = 1 (for a filter normalized to 1 rad/sec). If the Q or frequency response of any of the sections is off slightly, the overall response will deviate from the desired response. It may be close, but it won't be exact. As is typically the case with engineering, a decision must be made as to what tradeoffs should be made. For instance, do we really need a particular response exactly? Is there a problem if there is a little more ripple in the passband? Or if the cutoff frequency is at a slightly different frequency? These are the types of questions that face a designer, and will vary from design to design.

Passive Components (Resistors, Capacitors, Inductors)

Passive components are the first problem. When designing filters, the calculated values of components will most likely not available commercially. Resistors, capacitors, and inductors come in standard values. While custom values can be ordered, the practical tolerance will probably still be ± 1% at best. An alternative is to build the required value out of a series and/or parallel combination of standard values. This increases the cost and size of the filter. Not only is the cost of components increased, so are the manufacturing costs, both for loading and tuning the filter. Furthermore, success will be still limited by the number of parts that are used, their tolerance, and their tracking, both over temperature and time.

A more practical way is to use a circuit analysis program to determine the response using standard values. The program can also evaluate the effects of component drift over temperature. The values of the sensitive components are adjusted using parallel combinations where needed, until the response is within the desired limits. Many of the higher end filter CAD programs include this feature.

The resonant frequency and Q of a filter are typically determined by the component values. Obviously, if the component value is drifting, the frequency and the Q of the filter will drift which, in turn, will cause the frequency response to vary. This is especially true in higher order filters.

Higher order implies higher Q sections. Higher Q sections means that component values are more critical, since the Q is typically set by the ratio of two or more components, typically capacitors.

In addition to the initial tolerance of the components, you must also evaluate effects of temperature/time drift. The temperature coefficients of the various components may be different in both magnitude and sign. Capacitors, especially, are difficult in that not only do they drift, but the temperature coefficient (TC) is also a function of temperature, as shown in Figure 5-82. This represents the temperature coefficient of a (relatively) poor film capacitor, which might be typical for a Polyester or Polycarbonate type. *Linear TC* in film capacitors can be found in the polystyrene, polypropylene, and Teflon dielectrics. In these types TC is on the order of 100-200ppm/°C, and if necessary, this can be compensated with a complementary TC elsewhere in the circuit.

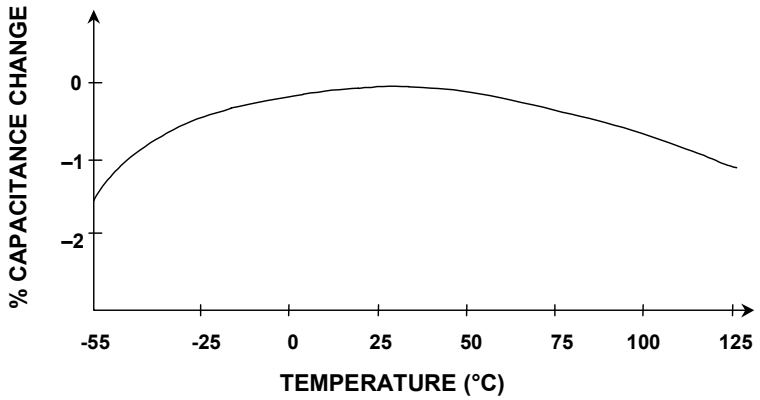

Figure 5-82: *A poor film capacitor temperature coefficient*

The lowest TC dielectrics are NPO (or COG) ceramic (±30ppm/°C), and polystyrene (–120ppm/°C). Some capacitors, mainly the plastic film types, such as polystyrene and polypropylene, also have a limited temperature range.

While there is infinite choice of the values of the passive components for building filters, in practice there are physical limits. Capacitor values below 10pF and above 10µF are not practical. Electrolytic capacitors should be avoided. Electrolytic capacitors are typically very leaky. A further potential problem is if they are operated without a polarizing voltage, they become non-linear when the AC voltage reverse biases them. Even with a DC polarizing voltage, the AC signal can reduce the instantaneous voltage to 0V or below. Large values of film capacitors are physically very large.

Resistor values of less than 100Ω should be avoided, as should values over 1MΩ. Very low resistance values (under 100Ω) can require a great deal of drive current and dissipate a great deal of power. Both of these should be avoided. And low values and very large values of resistors may not be as readily available. Very large values tend to be more prone to parasitics since smaller capacitances will couple more easily into larger impedance levels. Noise also increases with the square root of the resistor value. Larger value resistors also will cause larger offsets due to the effects of the amplifier bias currents.

Parasitic capacitances due to circuit layout and other sources affect the performance of the circuit. They can form between two traces on a PC board (on the same side or opposite side of the board), between leads of adjacent components, and just about everything else you can (and in most cases can't) think of. These capacitances are usually small, so their effect is greater at high impedance nodes. Thus, they can be controlled most of the time by keeping the impedance of the circuits down. Remember that the effects of stray capacitance are frequency dependent, being worse at high frequencies because the impedance drops with increasing frequency.

Parasitics are not just associated with outside sources. They are also present in the components themselves.

A capacitor is more than just a capacitor in most instances. A real capacitor has inductance (from the leads and other sources) and resistance as shown in Figure 5-83. This resistance shows up in the specifications as leakage and poor power factor. Obviously, we would like capacitors with very low leakage and good power factor (see Figure 5-84).

In general, it is best to use plastic film (preferably Teflon or polystyrene) or mica capacitors and metal film resistors, both of moderate to low values in our filters.

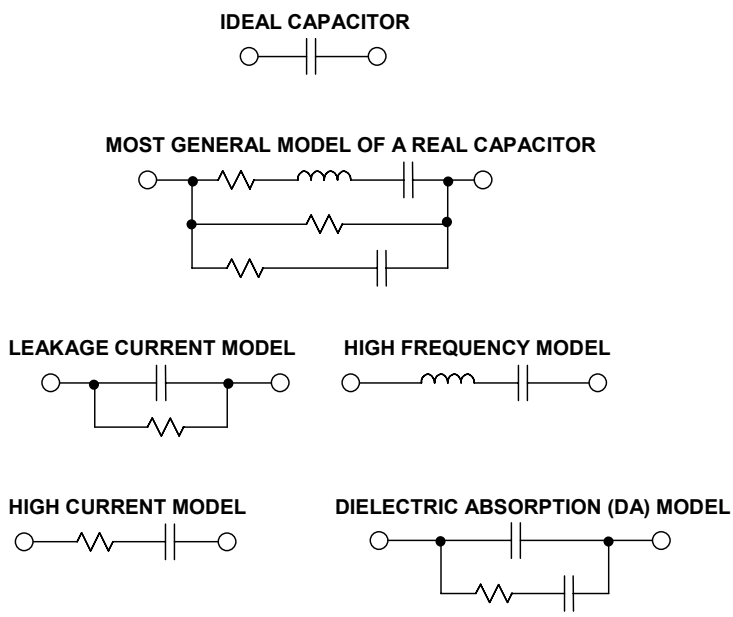

Figure 5-83: *Capacitor equivalent circuit*

One way to reduce component parasitics is to use surface mounted devices. Not having leads means that the lead inductance is reduced. Also, being physically smaller allows more optimal placement. A disadvantage is that not all types of capacitors are available in surface mount. Ceramic capacitors are popular surface mount types, and of these, the NPO family has the best characteristics for filtering. Ceramic capacitors may also be prone to microphonics. Microphonics occurs when the capacitor turns into a motion sensor, similar to a strain gauge, and turns vibration into an electrical signal, which is a form of noise.

CAPACITOR COMPARISON CHART

TYPE	TYPICAL DA	ADVANTAGES	DISADVANTAGES
Polystyrene	0.001% to 0.02%	Inexpensive Low DA Good stability (~120ppm/°C)	Damaged by temperature > +85°C Large High inductance Vendors limited
Polypropylene	0.001% to 0.02%	Inexpensive Low DA Stable (~200ppm/°C) Wide range of values	Damaged by temperature > +105°C Large High inductance
Teflon	0.003% to 0.02%	Low DA available Good stability Operational above +125 °C Wide range of values	Expensive Large High inductance
Polycarbonate	0.1%	Good stability Low cost Wide temperature range Wide range of values	Large DA limits to 8-bit applications High inductance
Polyester	0.3% to 0.5%	Moderate stability Low cost Wide temperature range Low inductance (stacked film)	Large DA limits to 8-bit applications High inductance (conventional)
NP0 Ceramic	<0.1%	Small case size Inexpensive, many vendors Good stability (30ppm/°C) 1% values available Low inductance (chip)	DA generally low (may not be specified) Low maximum values (≤ 10nF)
Monolithic Ceramic (High K)	>0.2%	Low inductance (chip) Wide range of values	Poor stability Poor DA High voltage coefficient
Mica	>0.003%	Low loss at HF Low inductance Good stability 1% values available	Quite large Low maximum values (≤ 10nF) Expensive
Aluminum Electrolytic	Very high	Large values High currents High voltages Small size	High leakage Usually polarized Poor stability, accuracy Inductive
Tantalum Electrolytic	Very high	Small size Large values Medium inductance	High leakage Usually polarized Expensive Poor stability, accuracy

Figure 5-84: *Capacitor comparison chart*

RESISTOR COMPARISON CHART

	TYPE	ADVANTAGES	DISADVANTAGES
DISCRETE	Carbon Composition	Lowest Cost High Power/Small Case Size Wide Range of Values	Poor Tolerance (5%) Poor Temperature Coefficient (1500 ppm/°C)
	Wirewound	Excellent Tolerance (0.01%) Excellent TC (1ppm/°C) High Power	Reactance is a Problem Large Case Size Most Expensive
	Metal Film	Good Tolerance (0.1%) Good TC (<1 to 100ppm/°C) Moderate Cost Wide Range of Values Low Voltage Coefficient	Must be Stabilized with Burn-In Low Power
	Bulk Metal or Metal Foil	Excellent Tolerance (to 0.005%) Excellent TC (to <1ppm/°C) Low Reactance Low Voltage Coefficient	Low Power Very Expensive
	High Megohm	Very High Values (10^8 to $10^{14}\Omega$) Only Choice for Some Circuits	High Voltage Coefficient (200ppm/V) Fragile Glass Case (Needs Special Handling) Expensive
NETWORKS	Thick Film	Low Cost High Power Laser-Trimmable Readily Available	Fair Matching (0.1%) Poor TC (>100ppm/°C) Poor Tracking TC (10ppm/°C)
	Thin Film	Good Matching (<0.01%) Good TC (<100ppm/°C) Good Tracking TC (2ppm/°C) Moderate Cost Laser-Trimmable Low Capacitance Suitable for Hybrid IC Substrate	Often Large Geometry Limited Values and Configurations

Figure 5-85: *Resistor comparison chart*

Resistors also have parasitic inductances due to leads and parasitic capacitance. The various qualities of resistors are compared in Figure 5-85.

Limitations of Active Elements (Op Amps) in Filters

The active element of the filter will also have a pronounced effect on the response. In developing the various topologies (Multiple Feedback, Sallen-Key, State Variable, etc.), the active element was always modeled as a "perfect" operational amplifier. That is to say it has:

1) infinite gain
2) infinite input impedance
3) zero output impedance

none of which vary with frequency. While amplifiers have improved a great deal over the years, this model has not yet been realized.

The most important limitation of the amplifier has to due with its gain variation with frequency. All amplifiers are band limited. This is due mainly to the physical limitations of the devices with which the amplifier is constructed. Negative feedback theory tells us that the response of an amplifier must be first order (– 6dB per octave) when the gain falls to unity in order to be stable. To accomplish this, a real pole is usually introduced in the amplifier so the gain rolls off to <1 by the time the phase shift reaches 180° (plus some phase margin, hopefully). This roll off is equivalent to that of a single pole filter. So in simplistic terms, the transfer function of the amplifier is added to the transfer function of the filter to give a composite function. How much the frequency dependent nature of the op amp affects the filter is dependent on which topology is used as well as the ratio of the filter frequency to the amplifier bandwidth.

The Sallen-Key configuration, for instance, is the least dependent on the frequency response of the amplifier. All that is required is for the amplifier response to be flat to just past the frequency where the attenuation of the filter is below the minimum attenuation required. This is because the amplifier is used as a gain block. Beyond cutoff, the attenuation of the filter is reduced by the rolloff of the gain of the op amp. This is because the output of the amplifier is phase shifted, which results in incomplete nulling when fed back to the input. There is also an issue with the output impedance of the amplifier rising with frequency as the open loop gain rolls off. This causes the filter to lose attenuation.

The state variable configuration uses the op amps in two modes, as amplifiers and as integrators. As amplifiers, the constraint on frequency response is basically the same as for the Sallen-Key, which is flat out to the minimum attenuation frequency. As an integrator, however, more is required. A good rule of thumb is that the open loop gain of the amplifier must be greater than 10 times the closed loop gain (including peaking from the Q of the circuit). This should be taken as the absolute minimum requirement. What this means is that there must be 20dB loop gain, minimum. Therefore, an op amp with 10MHz unity gain bandwidth is the minimum required to make a 1MHz integrator. What happens is that the effective Q of the circuit increases as loop gain decreases. This phenomenon is called Q enhancement. The mechanism for Q enhancement is similar to that of slew rate limitation. Without sufficient loop gain, the op amp virtual ground is no longer at ground. In other words, the op amp is no longer behaving as an op amp. Because of this, the integrator no longer behaves like an integrator.

The multiple feedback configuration also places heavy constraints on the active element. Q enhancement is a problem in this topology as well. As the loop gain falls, the Q of the circuit increases, and the parameters of the filter change. The same rule of thumb as used for the integrator also applies to the multiple feedback topology (loop gain should be at least 20dB). The filter gain must also be factored into this equation.

In the FDNR realization, the requirements for the op amps are not as clear. To make the circuit work, we assume that the op amps will be able to force the input terminals to be the same voltage. This implies that the loop gain be a minimum of 20dB at the resonant frequency.

Also it is generally considered to be advantageous to have the two op amps in each leg matched. This is easily accomplished using dual op amps. It is also a good idea to have low bias current devices for the op amps, so FET input op amps should be used, all other things being equal.

In addition to the frequency dependent limitations of the op amp, several others of its parameters may be important to the filter designer.

One is input impedance. We assume in the "perfect" model that the input impedance is infinite. This is required so that the input of the op amp does not load the network around it. This means that we probably want to use FET amplifiers with high impedance circuits.

There is also a small frequency dependent term to the input impedance, since the effective impedance is the real input impedance multiplied by the loop gain. This usually is not a major source of error, since the network impedance of a high frequency filter should be low.

Distortion resulting from Input Capacitance Modulation

Another subtle effect can be noticed with FET input amps. The input capacitance of a FET changes with the applied voltage. When the amplifier is used in the inverting configuration, such as with the multiple feedback configuration, the applied voltage is held to 0V. Therefore there is no capacitance modulation. However, when the amplifier is used in the non-inverting configuration, such as in the Sallen-Key circuit, this form of distortion can exist.

There are two ways to address this issue. The first is to keep the equivalent impedance low. The second is to balance the impedance seen by the inputs. This is accomplished by adding a network into the feedback leg of the amplifier which is equal to the equivalent input impedance. Note that this will only work for a unity gain application.

As an example, which is taken from the OP176 data sheet, a 1kHz highpass Sallen-Key filter is shown (Figure 5-86). Figure 5-87 shows the distortion for the uncompensated version (curve A1) as well as with the compensation (curve A2). Also shown is the same circuit with the impedances scaled up by a factor of 10 (B1 uncompensated, B2 compensated). Note that the compensation improves the distortion, but not as much as having low impedance to start with.

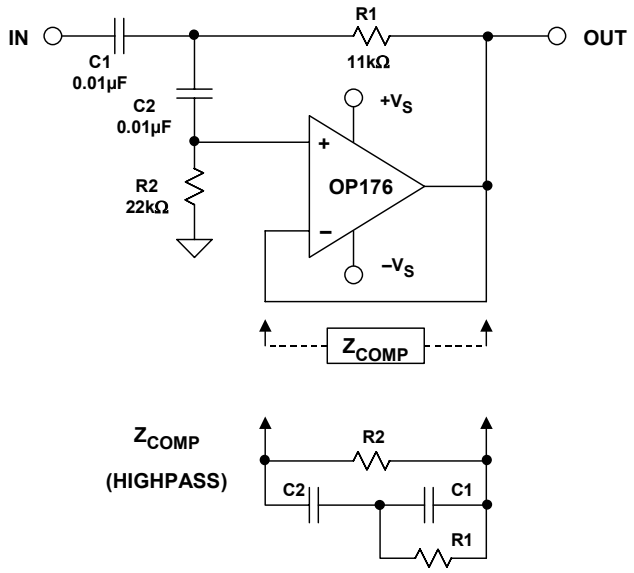

Figure 5-86: *Compensation for input capacitance voltage modulation*

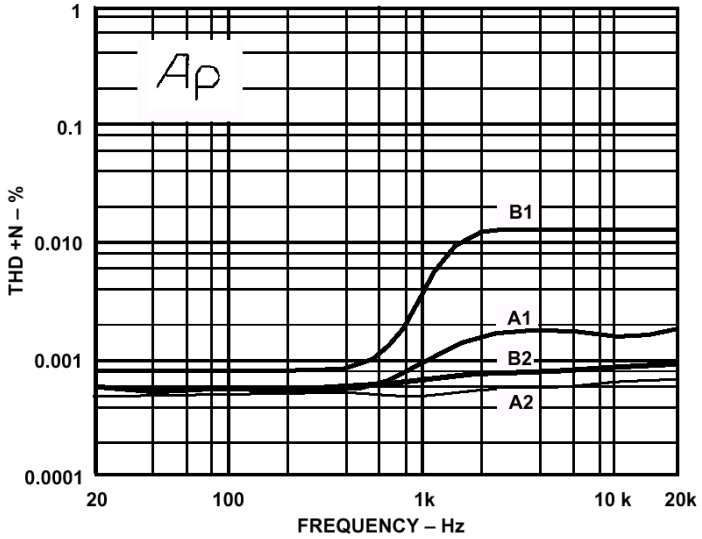

Figure 5-87: *Distortion due to input capacitance modulation*

Similarly, the op amp output impedance affects the response of the filter. The output impedance of the amplifier is divided by the loop gain, therefore the output impedance will rise with increasing frequency. This may have an effect with high frequency filters if the output impedance of the stage driving the filter becomes a significant portion of the network impedance.

The fall of loop gain with frequency can also affect the distortion of the op amp, since there is less loop gain available for correction. In the multiple feedback configuration the feedback loop is also frequency dependent, which may further reduce the feedback correction, resulting in increased distortion. This effect is counteracted somewhat by the reduction of distortion components in the filter network (assuming a lowpass or bandpass filter).

All of the discussion so far is based on using classical voltage feedback op amps. Current feedback, or transimpedance, op amps offer improved high frequency response, but are unusable in any topologies discussed except the Sallen-Key. The problem is that capacitance in the feedback loop of a current feedback amplifier usually causes it to become unstable. Also, most current feedback amplifiers will only drive a small capacitive load. Therefore, it is difficult to build classical integrators using current feedback amplifiers. Some current feedback op amps have an external pin that may be used to configure them as a very good integrator, but this configuration does not lend itself to classical active filter designs.

Current feedback integrators tend to be non-inverting, which is not acceptable in the state variable configuration. Also, the bandwidth of a current feedback amplifier is set by its feedback resistor, which would make the Multiple Feedback topology difficult to implement. Another limitation of the current feedback amplifier in the Multiple Feedback configuration is the low input impedance of the inverting terminal. This would result in loading of the filter network. Sallen-Key filters are possible with current feedback amplifiers, since the amplifier is used as a non-inverting gain block. New topologies that capitalize on the current feedback amplifiers superior high frequency performance and compensate for its limitations will have to be developed.

The last thing that you need to be aware of is exceeding the dynamic range of the amplifier. Qs over 0.707 will cause peaking in the response of the filter (see Figures 5-5 through 5-7). For high Q's, this could cause overload of the input or output stages of the amplifier with a large input. Note that relatively small values of Q can cause significant peaking. The Q times the gain of the circuit must stay under the loop gain (plus some margin, again, 20dB is a good starting point). This holds for multiple amplifier topologies as well. Be aware of internal node levels, as well as input and output levels. As an amplifier overloads, its effective Q decreases, so the transfer function will appear to change even if the output appears undistorted. This shows up as the transfer function changing with increasing input level.

We have been dealing mostly with lowpass filters in our discussions, but the same principles are valid for highpass, bandpass, and band reject as well. In general, things like Q enhancement and limited gain/bandwidth will not affect highpass filters, since the resonant frequency will hopefully be low in relation to the cutoff frequency of the op amp. Remember, though, that the highpass filter will have a low pass section, by default, at the cutoff frequency of the amplifier. Bandpass and band reject (notch) filters will be affected, especially since both tend to have high values of Q.

The general effect of the op amp's frequency response on the filter Q is shown in Figure 5-88.

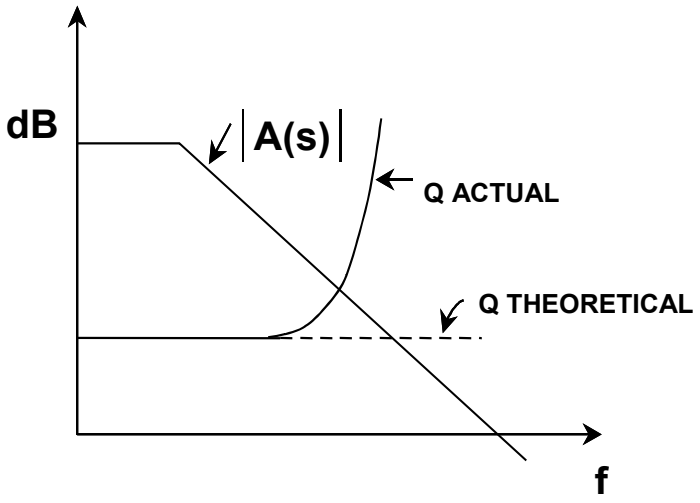

Figure 5-88: *Q enhancement*

As an example of the Q enhancement phenomenon, consider the Spice simulation of a 10kHz bandpass Multiple Feedback filter with Q = 10 and gain = 1, using a good high frequency amplifier (the AD847) as the active device. The circuit diagram is shown in Figure 5-89. The open loop gain of the AD847 is greater than 70dB at 10kHz as shown in Figure 5-91(A). This is well over the 20dB minimum, so the filter works as designed as shown in Figure 5-90.

We now replace the AD847 with an OP-90. The OP-90 is a DC precision amplifier and so has a limited bandwidth. In fact, its open loop gain is less than 10dB at 10kHz (see Figure 5-91(B)). This is not to imply that the AD847 is in all cases better than the OP-90. It is a case of misapplying the OP-90.

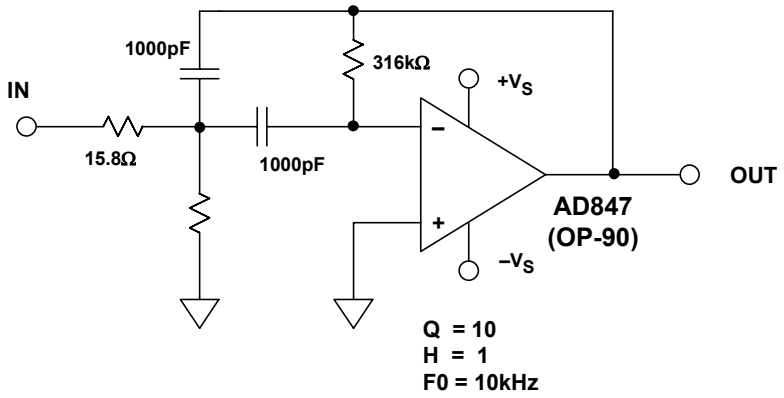

Figure 5-89: *1kHz multiple feedback bandpass filter*

From the output for the OP-90, also shown in Figure 5-90, we see that the magnitude of the output has been reduced, and the center frequency has shifted downward.

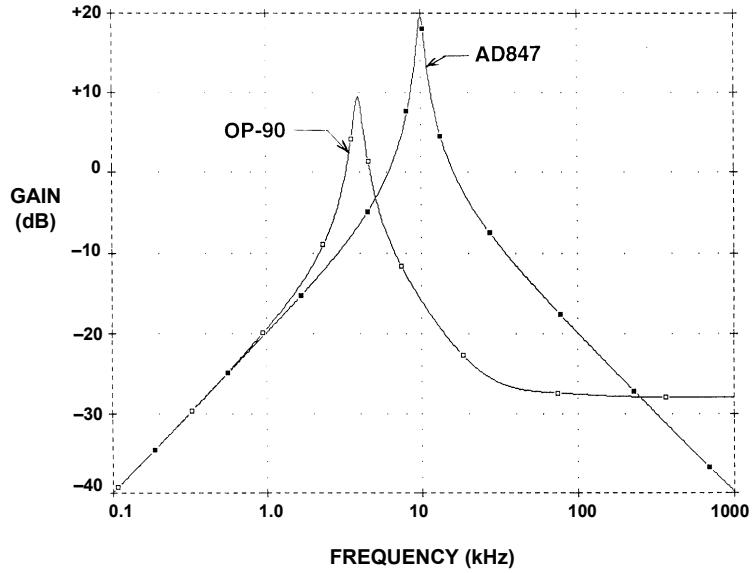

Figure 5-90: *Effects of "Q enhancement"*

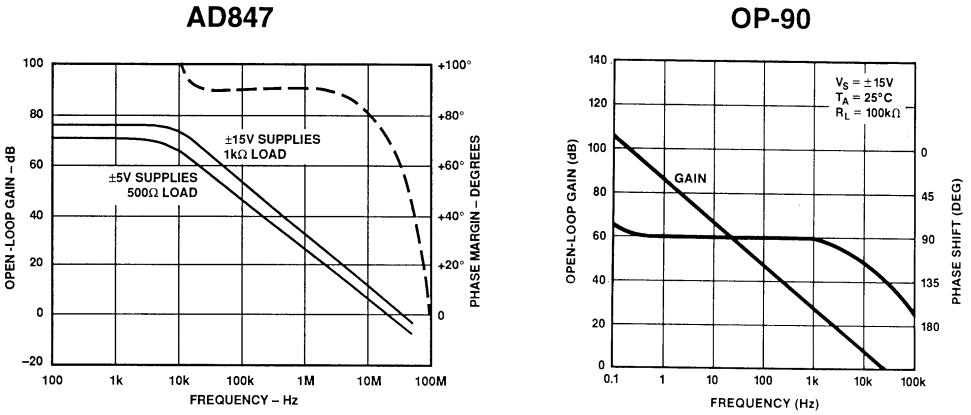

Figure 5-91: *AD847 and OP-90 Bode plots*

NOTES:

SECTION 5-8: DESIGN EXAMPLES

Several examples will now be worked out to demonstrate the concepts previously discussed

Antialias Filter

As an example, passive and active antialiasing filters will now be designed based upon a common set of specifications. The active filter will be designed in four ways: Sallen-Key, Multiple Feedback, State Variable, and Frequency Dependent Negative Resistance (FDNR).

The specifications for the filter are given as follows:

1) The cutoff frequency will be 8kHz.
2) The stopband attenuation will be 72dB. This corresponds to a 12 bit system.
3) Nyquist frequency of 50kSPS.
4) The Butterworth filter response is chosen in order to give the best compromise between attenuation and phase response.

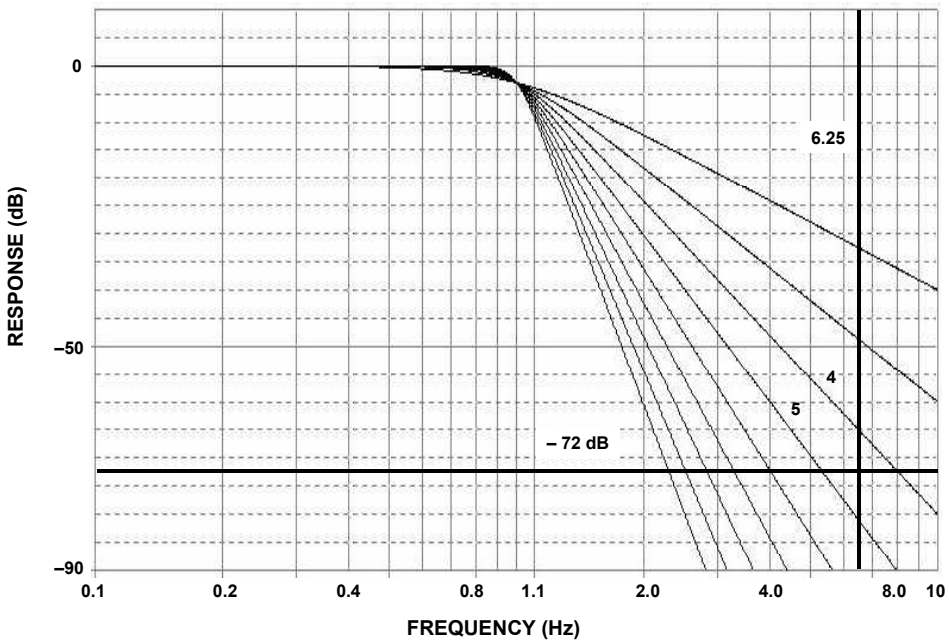

Figure 5-92: *Determining filter order*

Consulting the Butterworth response curves (Figure 5-14, reproduced above in Figure 5-92), we see that for a frequency ratio of 6.25 (50kSPS / 8kSPS), that a filter order of 5 is required.

Now consulting the Butterworth design table (Figure 5-25), the normalized poles of a 5th order Butterworth filter are:

STAGE	Fo	α
1	1.000	1.618
2	1.000	0.618
3	1.000	------

The last stage is a real (single) pole, thus the lack of an alpha value. It should be noted that this is not necessarily the order of implementation in hardware. In general, you would typically put the real pole last and put the second order sections in order of decreasing alpha (increasing Q) as we have done here. This will avoid peaking due to high Q sections possibly overloading internal nodes. Another feature of putting the single pole at the end is to bandlimit the noise of the op amps. This is especially true if the single pole is implemented as a passive filter.

For the passive design, we will choose the zero input impedance configuration. While "classic" passive filters are typically double terminated, that is with termination on both source and load ends, we are concerned with voltage transfer not power transfer so the source termination will not be used. From the design table (see Reference 2, p. 313), we find the normalized values for the filter (see Figure 5-93).

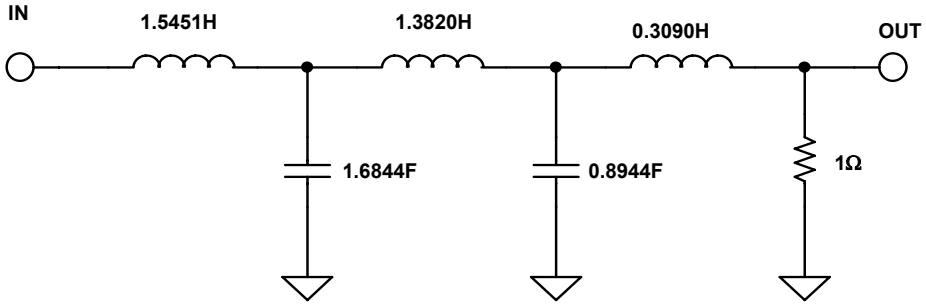

Figure 5-93: *Normalized passive filter implementation*

These values are normalized for a 1 rad/s filter with a 1Ω termination. To scale the filter we divide all reactive elements by the desired cutoff frequency, 8kHz (= 50265 rad/sec, = $2\pi\ 8\times10^3$). This is commonly referred to as the frequency scale factor (FSF). We also need to scale the impedance.

For this example, an arbitrary value of 1000Ω is chosen. To scale the impedance, we multiply all resistor and inductor values and divide all capacitor values by this magnitude, which is commonly referred to as the impedance scaling factor (Z).

After scaling, the circuit looks like Figure 5-94.

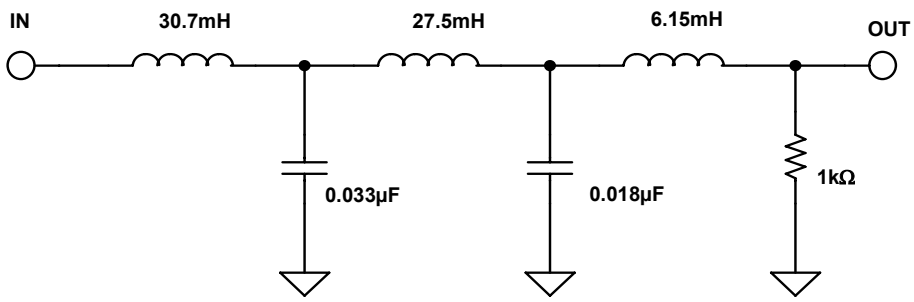

Figure 5-94: *Passive filter implementation*

For the Sallen-Key active filter, we use the design equations shown in Figure 5-49. The values for C1 in each section are arbitrarily chosen to give reasonable resistor values. The implementation is shown in Figure 5-95.

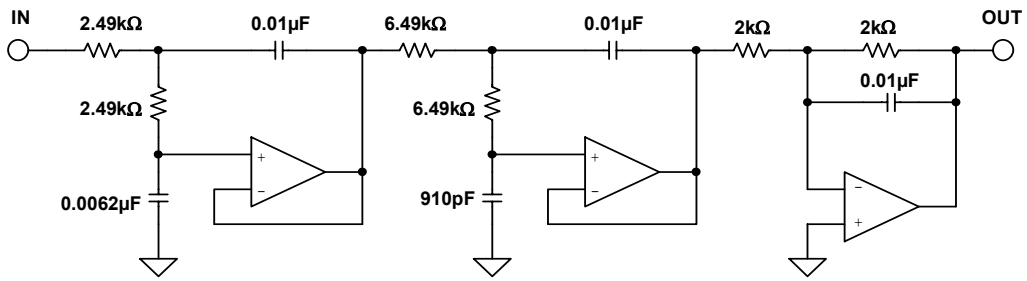

Figure 5-95: *Sallen-Key implementation*

The exact values have been rounded to the nearest standard value. For most active realization to work correctly, it is required to have a zero-impedance driver, and a return path for DC due to the bias current of the op amp. Both of these criteria are approximately met when you use an op amp to drive the filter.

In the above example the single pole has been built as an active circuit. It would have been just as correct to configure it as a passive RC filter. The advantage to the active section is lower output impedance, which may be an advantage in some applications, notably driving an ADC input that uses a switched capacitor structure.

This type of input is common on sigma delta ADCs as well as many other CMOS type of converters. It also eliminates the loading effects of the input impedance of the following stage on the passive section.

Figure 5-96 shows a multiple feedback realization of our filter. It was designed using the equations in Figure 5-52. In this case, the last section is a passive RC circuit.

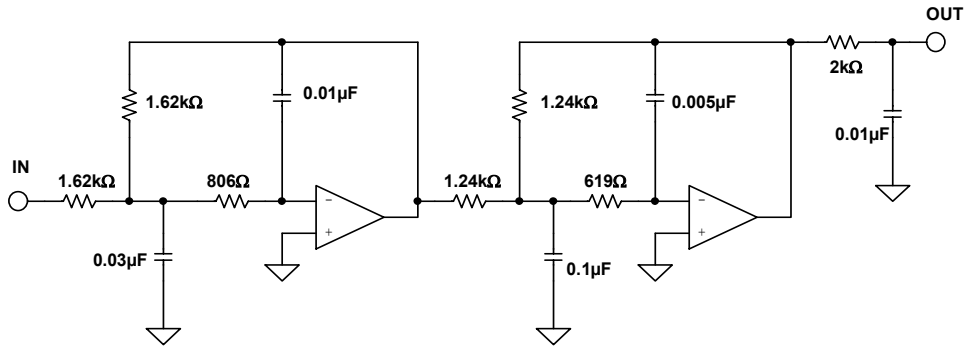

Figure 5-96: *Multiple feedback implementation*

An optional buffer could be added after the passive section, if desired. This would give many of the advantages outlined above, except for bandlimiting the noise of the output amp. By using one of the above two filter realizations, we have both an inverting and a non-inverting design.

The state variable filter, shown in Figure 5-97, was designed with the equations in Figure 5-55. Again, we have rounded the resistor values to the nearest standard 1% value.

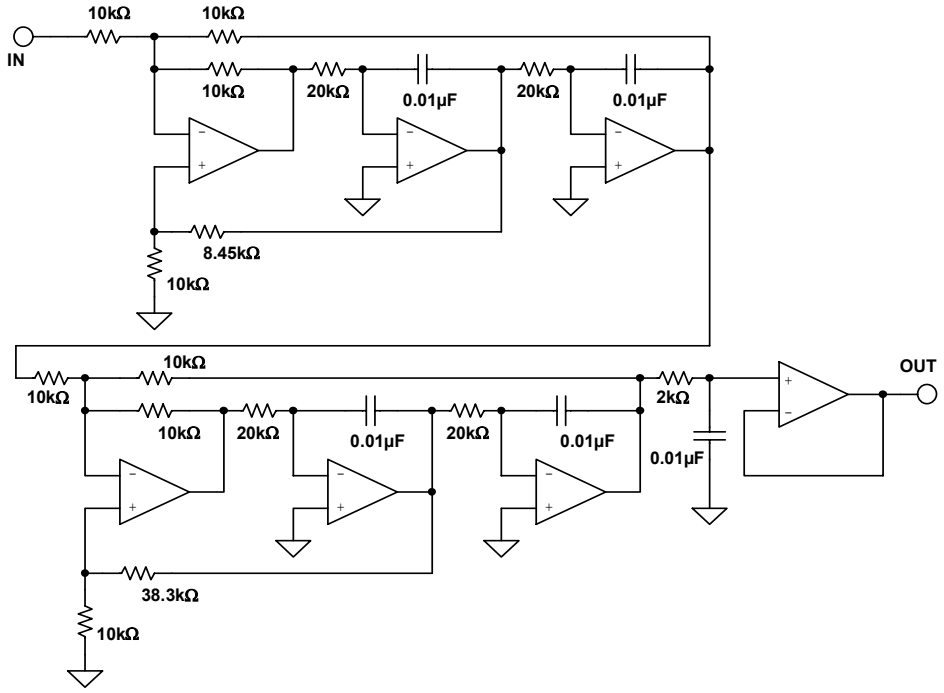

Figure 5-97: *State variable implementation*

Obviously this filter implementation has many more parts than either the Sallen-Key or the multiple feedback. The rational for using this circuit is that stability is improved and the individual parameters are independently adjustable.

The Frequency Dependent Negative Resistance (FDNR) realization of this filter is shown in Figure 5-98.

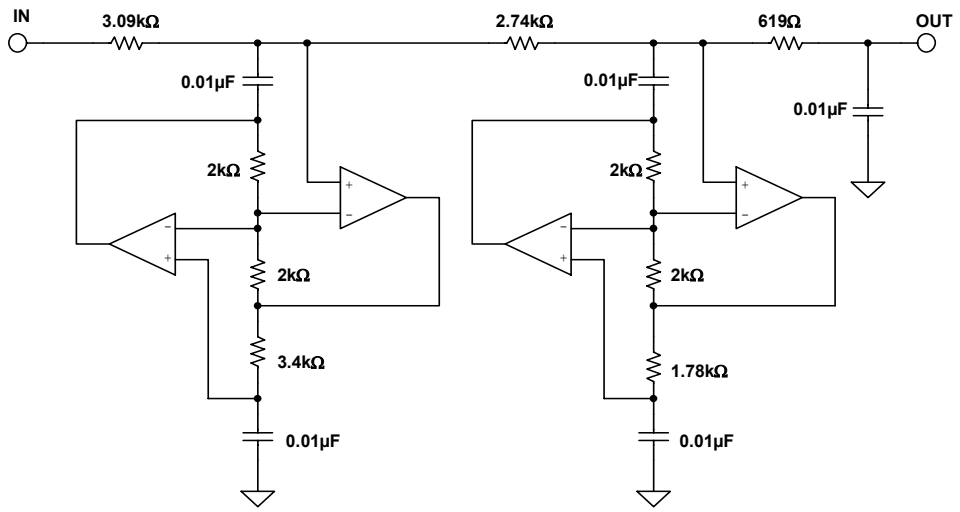

Figure 5.98: *FDNR Implementation*

In the conversion process from passive to FDNR, the D element is normalized for a capacitance of 1F. We then scale the filter to a more reasonable value (0.01µF in this case).

In all of the above implementations standard values were used instead of the calculated values. Any variation from the ideal values will cause a shift in the filter response characteristic, but often the effects are minimal. The computer can be used to evaluate these variations on the overall performance and determine if they are acceptable.

To examine the effect of using standard values, take the Sallen-Key implementation. Figure 5-99 shows the response of each of the 3 sections of the filter. While the Sallen-Key was the filter used, the results from any of the other implementations will give similar results.

Figure 5-100 then shows the effect of using standard values instead of calculated values. Notice that the general shape of the filter remains the same, just slightly shifted in frequency. This investigation was done only for the standard value of the resistors. To understand the total effect of component tolerance the same type of calculations would have to be done for the tolerance of all the components and also for their temperature and aging effects.

In active filter applications using op amps, the dc accuracy of the amplifier is often critical to optimal filter performance. The amplifier's offset voltage will be passed by the lowpass filter and may be amplified to produce excessive output offset. For low frequency applications requiring large value resistors, bias currents flowing through these resistors will also generate an output offset voltage.

In addition, at higher frequencies, an op amp's dynamics must be carefully considered. Here, slewrate, bandwidth, and open loop gain play a major role in op amp selection. The slewrate must be fast as well as symmetrical to minimize distortion.

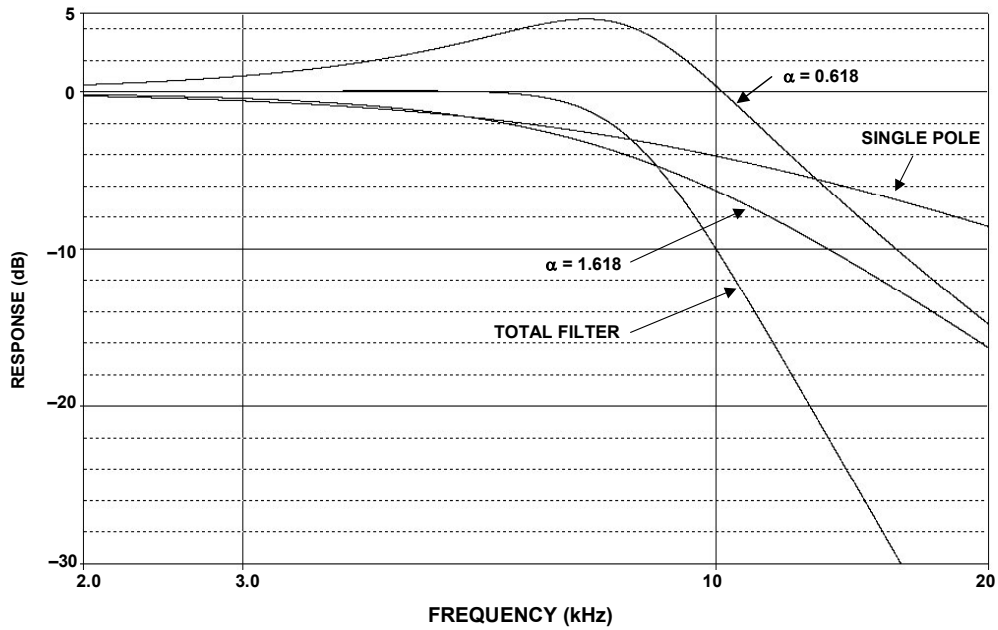

Figure 5-99: *Individual section response*

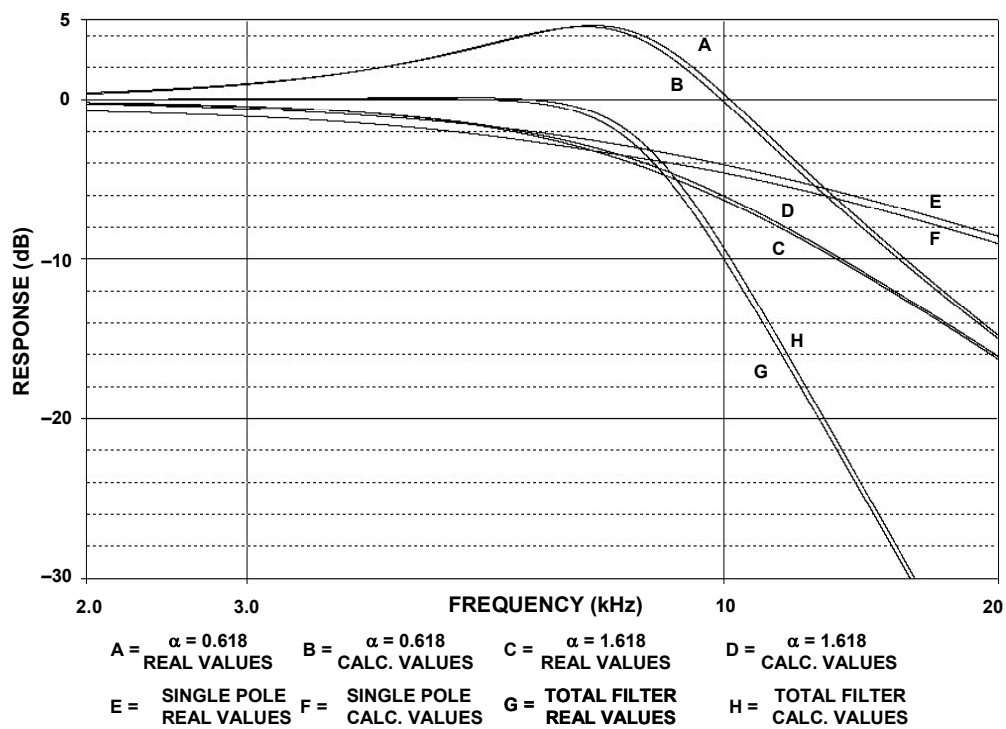

Figure 5-100: *Effect of using standard value resistors*

Transformations

In the next example the transformation process will be investigated:

As mentioned earlier, filter theory is based on a low pass prototype, which is then manipulated into the other forms. In these examples the prototype that will be used is a 1kHz, 3 pole, 0.5dB Chebyshev filter. A Chebyshev was chosen because it would show more clearly if the responses were not correct, a Butterworth would probably be too forgiving in this instance. A 3 pole filter was chosen so that a pole pair and a single pole would be transformed.

The pole locations for the LP prototype were taken from Figure 5-30. They are:

STAGE	α	β	F_O	α
1	0.2683	0.8753	1.0688	0.5861
2	0.5366		0.6265	

The first stage is the pole pair and the second stage is the single pole. Note the unfortunate convention of using α for 2 entirely separate parameters. The α and β on the left are the pole locations in the s-plane. These are the values that are used in the transformation algorithms. The α on the right is 1/Q, which is what the design equations for the physical filters want to see.

The Sallen-Key topology will be used to build the filter. The design equations in Figure 5-67 (pole pair) and Figure 5-66 (single pole) where then used to design the filter. The schematic is shown in Figure 5-101.

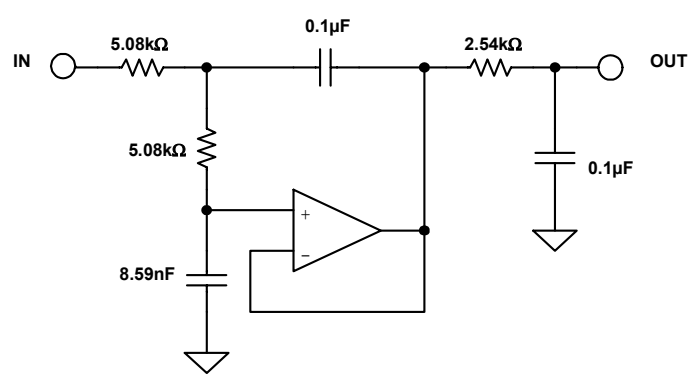

Figure 5-101: *Lowpass prototype*

Using the equation string described in Section 5, the filter is now transformed into a highpass filter. The results of the transformation are:

STAGE	α	β	F_O	α
1	0.3201	1.0443	0.9356	0.5861
2	1.8636		1.596	

A word of caution is warranted here. Since the convention of describing a Chebyshev filter is to quote the end of the error band instead of the 3dB frequency, the F_0 must be divided (for highpass) by the ratio of ripple band to 3dB bandwidth (Table 1, Section 4).

The Sallen-Key topology will again be used to build the filter. The design equations in Figure 5-68 (pole pair) and Figure 5-66 (single pole) where then used to design the filter. The schematic is shown in Figure 5-102.

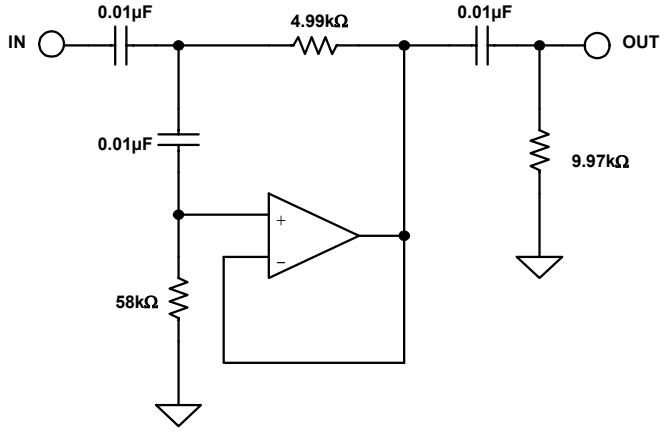

Figure 5-102: *Highpass transformation*

Figure 5-103 shows the response of the lowpass prototype and the highpass transformation. Note that they are symmetric around the cutoff frequency of 1kHz. Also note that the errorband is at 1kHz, not the –3dB point, which is characteristic of Chebyshev filters.

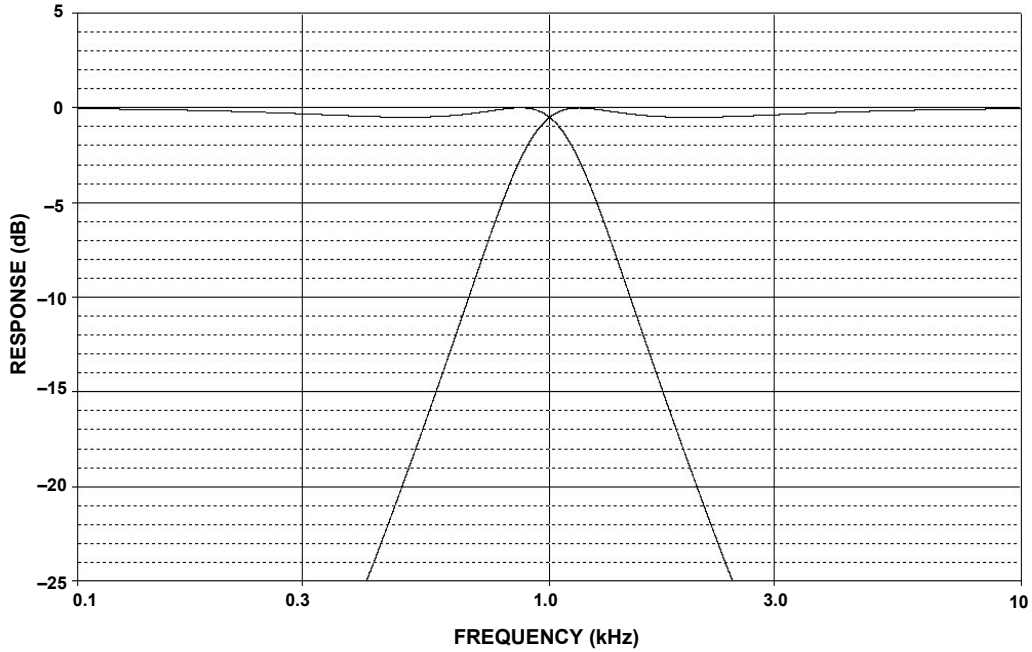

Figure 5-103: *Lowpass and highpass response*

The lowpass prototype is now converted to a bandpass filter. The equation string outlined in Section 5-5 is used for the transformation. Each pole of the prototype filter will transform into a pole pair. Therefore the 3 pole prototype, when transformed, will have 6 poles (3 pole pairs). In addition, there will be 6 zeros at the origin.

Part of the transformation process is to specify the 3 dB bandwidth of the resultant filter. In this case this bandwidth will be set to 500 Hz. The results of the transformation yield:

STAGE	F_0	Q	A_0
1	804.5	7.63	3.49
2	1243	7.63	3.49
3	1000	3.73	1

The reason for the gain requirement for the first 2 stages is that their center frequencies will be attenuated relative to the center frequency of the total filter. Since the resultant Q's are moderate (less than 20) the Multiple Feedback topology will be chosen. Figure 5-72 was then used to design the filter sections.

Figure 5-104 is the schematic of the filter and Figure 5-105 shows the filter response.

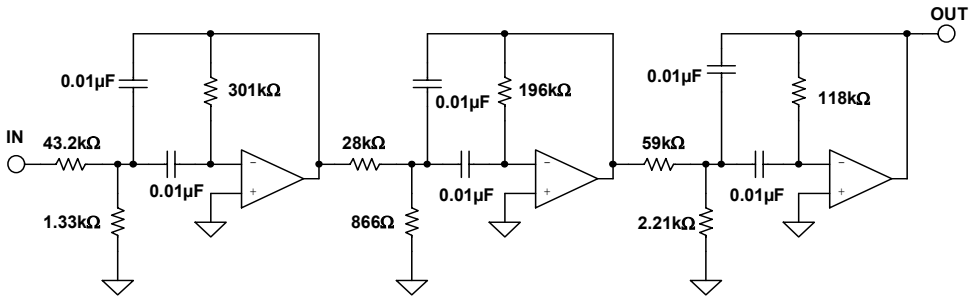

Figure 5-104: *Bandpass transformation*

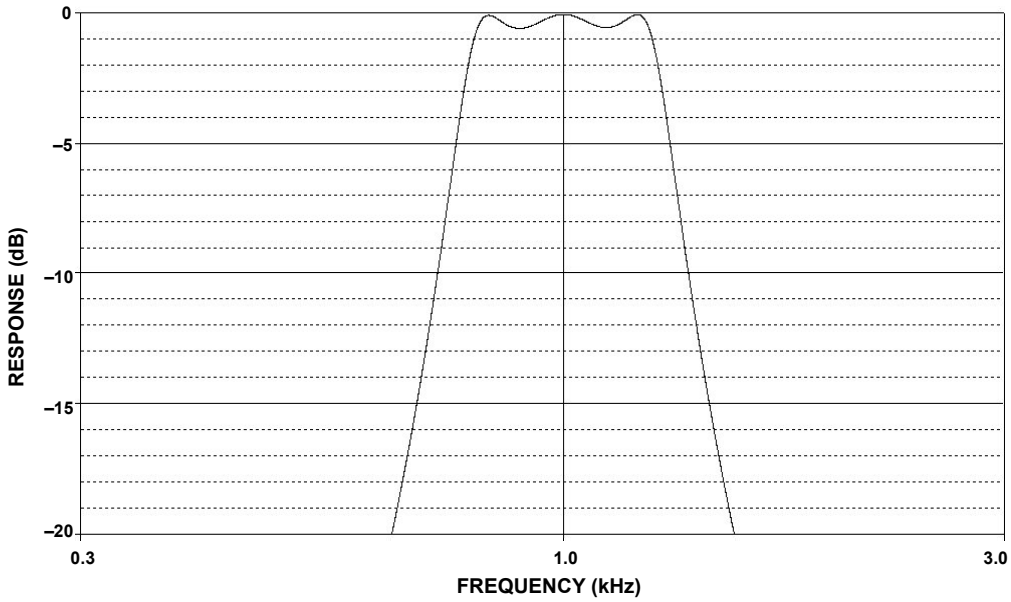

Figure 5-105: *Bandpass filter response*

Note that again there is symmetry around the center frequency. Also the 500Hz bandwidth is not 250Hz either side of the center frequency (arithmetic symmetry). Instead the symmetry is geometric, which means that for any 2 frequencies (F_1 & F_2) of equal amplitude are related by:

$$F_0 = \sqrt{F_1 * F_2}$$

Lastly the prototype will be transformed into a bandreject filter. For this the equation string in Section 5-5 is used. Again, each pole of the prototype filter will transform into a pole pair. Therefore, the 3 pole prototype, when transformed, will have 6 poles (3 pole pairs).

As in the bandpass case, part of the transformation process is to specify the 3dB bandwidth of the resultant filter. Again in this case this bandwidth will be set to 500Hz. The results of the transformation yield:

STAGE	F_0	Q	F_{0Z}
1	763.7	6.54	1000
2	1309	6.54	1000
3	1000	1.07	1000

Note that there are 3 cases of notch filters required. There is a standard notch ($F_0 = F_Z$, section 3), a lowpass notch ($F_0 < F_Z$, section 1) and a highpass notch ($F_0 > F_Z$, section 2). Since there is a requirement for all 3 types of notches, the Bainter Notch is used to build the filter. The filter is designed using Figure 5-77. The gain factors K1 & K2 are arbitrarily set to 1. Figure 5-106 is the schematic of the filter.

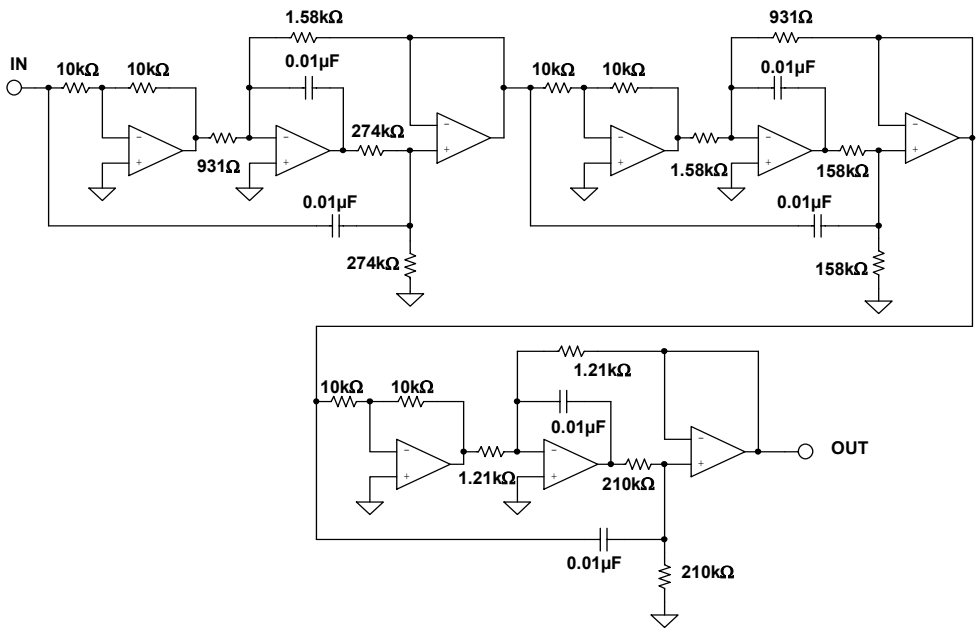

Figure 5-106: *Bandreject transformation*

The response of the filter is shown in Figure 5-107 and in detail in Figure 5-108. Again, note the symmetry around the center frequency. Again the frequencies have geometric symmetry.

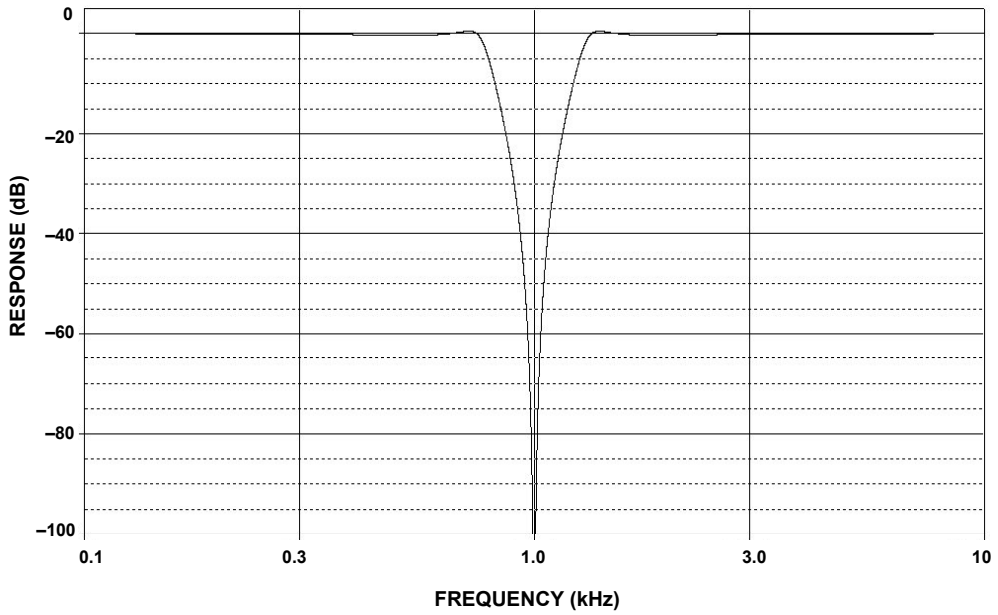

Figure 5-107: *Bandreject response*

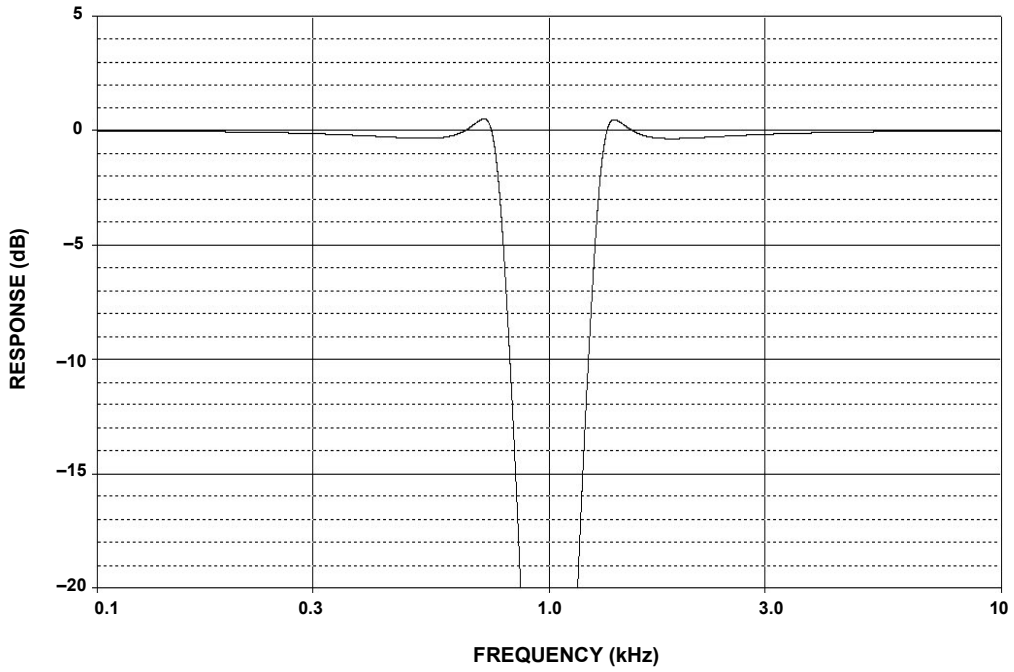

Figure 5-108: *Bandreject response (detail)*

CD Reconstruction Filter

This design was done for a magazine article describing a high quality outboard D/A converter for use with digital audio sources (se Reference 26).

A reconstruction filter is required on the output of a D/A converter because, despite the name, the output of a D/A converter is not really an analog voltage but instead a series of steps. The converter will put out a discrete voltage, which it will then hold until the next sample is asserted. The filter's job is to remove the high frequency components, smoothing out the waveform. This is why the filter is sometimes referred to as a smoothing filter. This also serves to eliminate the aliases of the conversion process. The "standard" in the audio industry is to use a 3rd order Bessel function as the reconstruction filter. The reason to use a Bessel filter is that it has the best phase response. This helps to preserve the phase relationship of the individual tones in the music. The price for this phase "goodness" is that the amplitude discrimination is not as good as some other filter types. If we assume that we are using 8× oversampling of the 48kSPS data stream in the D/A converter then the aliases will appear at 364kHz (8 × 48k – 20k). The digital filter that is used in the interpolation process will eliminate the frequencies between 20kHz and 364kHz. If we assume that the bandedge is 30kHz, then we have a frequency ratio of approximately 12 (364 ÷ 30). We use 30kHz as the band edge, rather than 20kHz to minimize the rolloff due to the filter in the passband. In fact, the complete design for this filter includes a shelving filter to compensate for the passband rolloff. Extrapolating from Figure 5-20, a 3rd order Bessel will only provide on the order of 55dB attenuation at 12 × Fo. This is only about 9 bit accuracy.

By designing the filter as 7th order, and by designing it as a linear phase with equiripple error of 0.05°, we can increase the stopband attenuation to about 120dB at 12 × Fo. This is close to the 20 bit system that we are hoping for.

The filter will be designed as a FDNR type. This is an arbitrary decision. Reasons to choose this topology are it’s low sensitivities to component tolerances and the fact that the op amps are in the shunt arms rather than in the direct signal path.

The first step is to find the passive prototype. To do this, use the charts in Williams's book. We then get the circuit shown in Figure 5-109A. Next perform a translation in the s-plane. This gives the circuit shown in Figure 5-109B. This filter is scaled for a frequency of 1Hz. and an impedance level of 1Ω. The D structure of the converted filter is replaced by a GIC structure that can be physically realized. The filter is then denormalize by frequency (30kHz) and impedance (arbitrarily chosen to be 1kΩ). This gives a frequency-scaling factor (FS) of 1.884×10^5 (= $2\pi\ (3 \times 10^4)$). Next arbitrarily choose a value of 1nF for the capacitor. This gives an impedance-scaling factor (Z) of 5305 (= (C_{OLD}/C_{NEW})/ FSF).

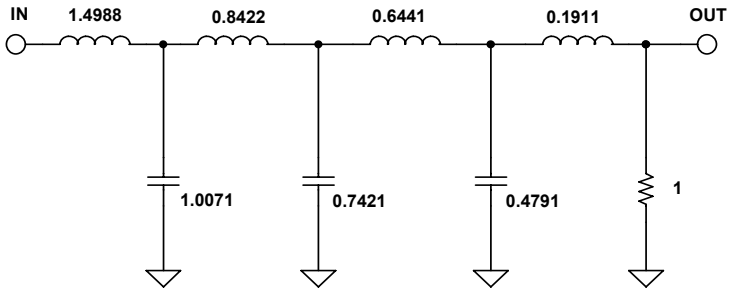

Figure 5-109A: *CD Reconstruction filter – passive prototype*

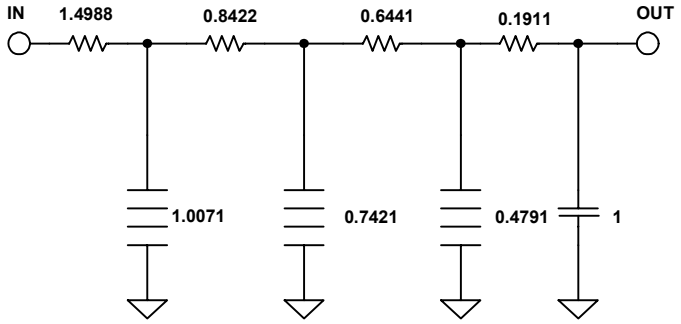

Figure 5-109B: *CD Reconstruction filter – transformation in s-plane*

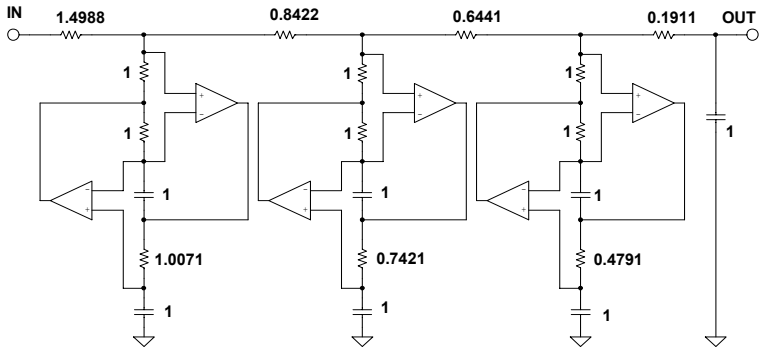

Figure 5-109C: *CD Reconstruction filter – normalized FDNR*

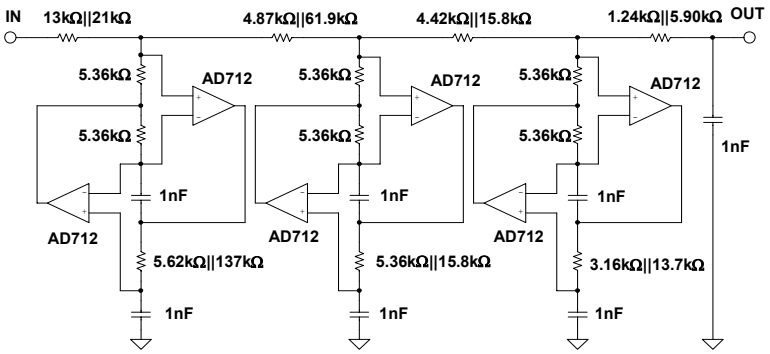

Figure 5-109D: *CD Reconstruction filter – final filter*

Then multiply the resistor values by Z. This results in the resistors that had the normalized value of 1Ω will now have a value of 5.305kΩ. For the sake of simplicity adopt the standard value of 5.36kΩ. Working backwards, this will cause the cutoff frequency to change to 29.693kHz. This slight shift of the cutoff frequency will be acceptable.

The frequency scaling factor is then recalculated with the new center frequency and this value is used to denormalize the rest of the resistors. The design flow is illustrated in Figure 5-109. The final schematic is shown it Figure 5-109D.

The performance of the filter is shown in Figure 5-110(A-D).

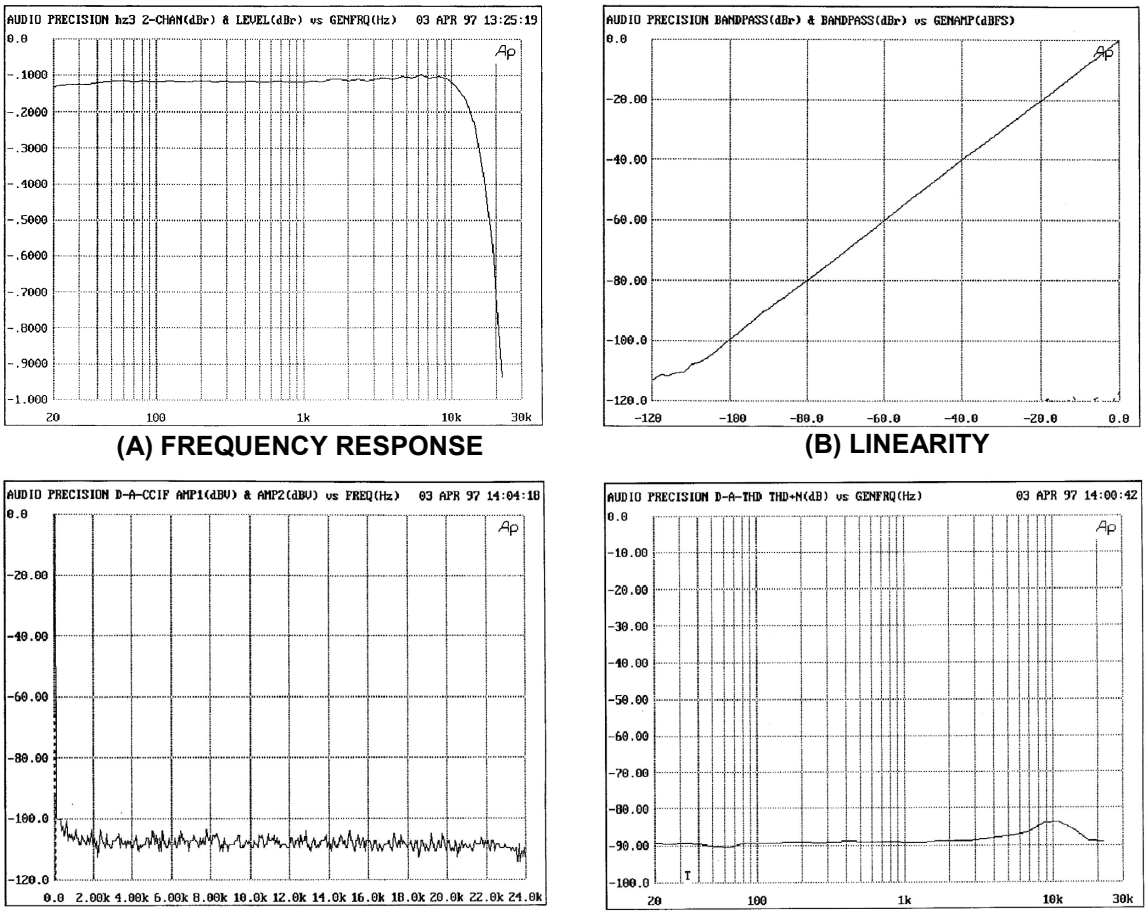

Figure 5-110: *CD filter performance*

Digitally Programable State Variable Filter

One of the attractive features of the state variable filter is that the parameters (gain, cutoff frequency and "Q") can be individually adjusted. This attribute can be exploited to allow control of these parameters.

To start, the filter is reconfigured slightly. The resistor divider that determines Q (R6 & R7 of Figure 5-54) is changed to an inverting configuration. The new filter schematic is shown in Figure 5-111. Then the resistors R1, R2, R3 & R4 (of Figure 5-111) are replaced by CMOS multiplying DACs. Note that R5 is implemented as the feedback resistor implemented in the DAC. The schematic of this circuit is shown in Figure 5-112.

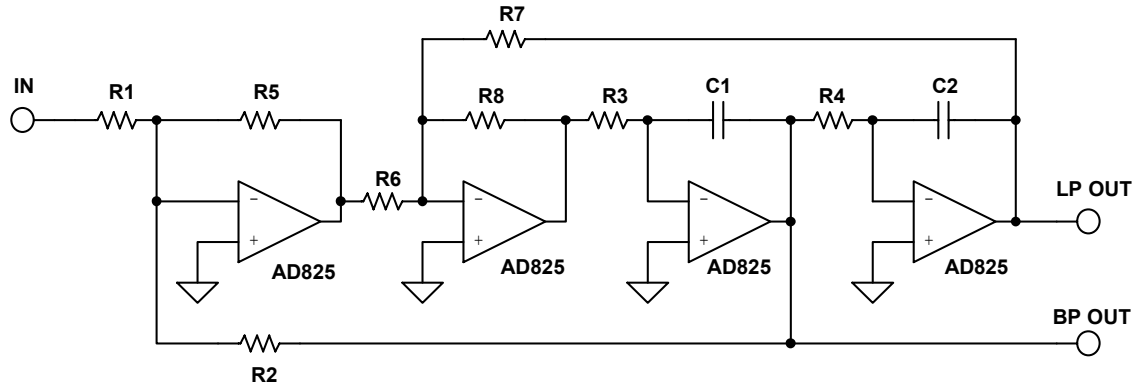

Figure 5-111: *Redrawn state variable filter*

The AD7528 is an 8 bit dual MDAC. The AD825 is a high speed FET input opamp. Using these components the frequency range can be varied from around 550Hz to around 150kHz (Figure 5-113). The Q can be varied from approximately 0.5 to over 12.5 (Figure 5-114). The gain of circuit can be varied from 0dB to –48dB (Figure 5-115).

The operation of the DACs in controlling the parameters can be best thought of as the DACs changing the effective resistance of the resistors. This relationship is:

$$\text{DAC EQUIVALENT RESISTANCE} \quad \frac{256 * \text{DAC RESISTANCE}}{\text{DAC CODE (DECIMAL)}}$$

This, in effect, varies the resistance from 11kΩ to 2.8MΩ for the AD7528.

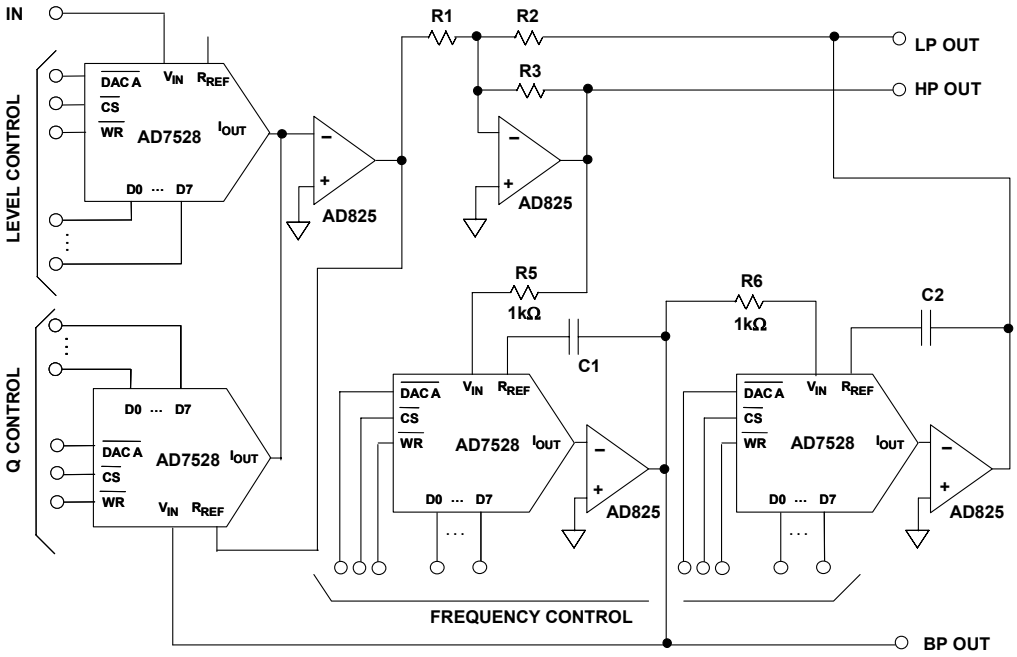

Figure 5-112: *Digitally controlled state variable filter*

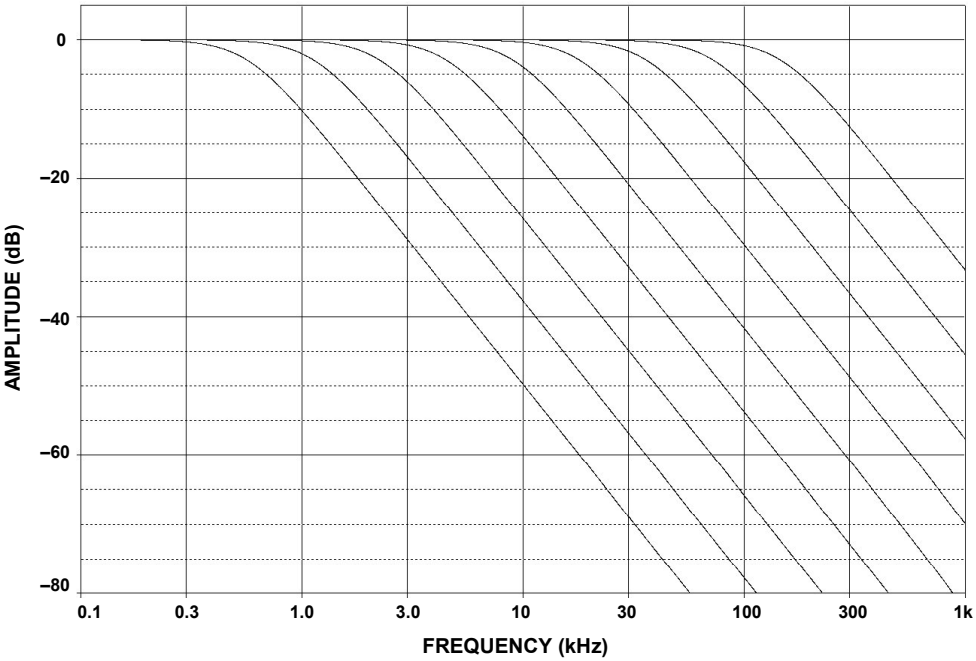

Figure 5-113: *Frequency response vs. DAC control word*

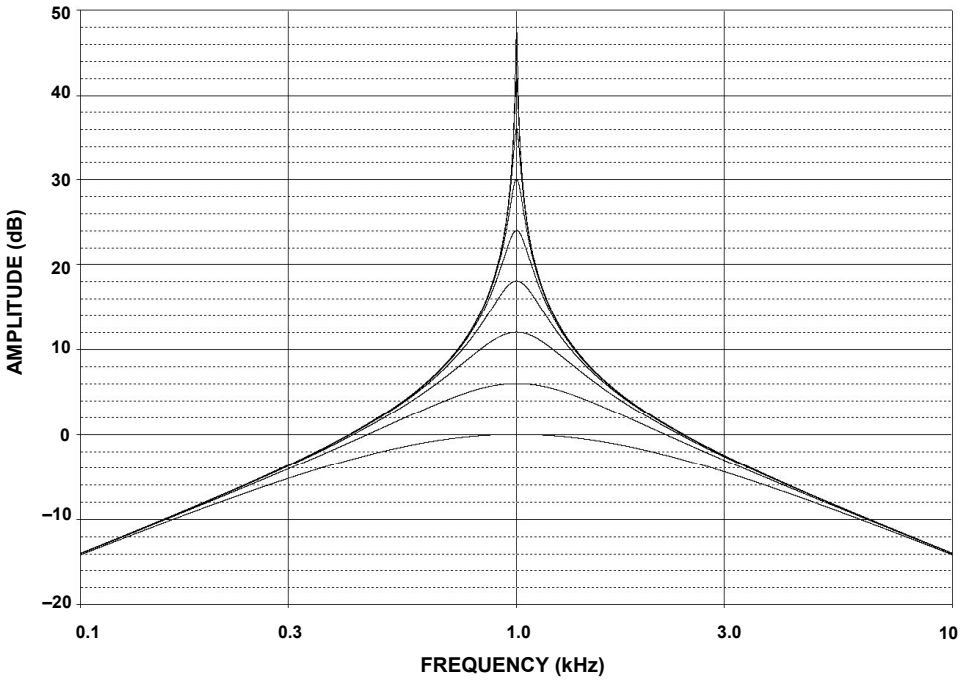

Figure 5-114: *Q Variation vs. DAC control word*

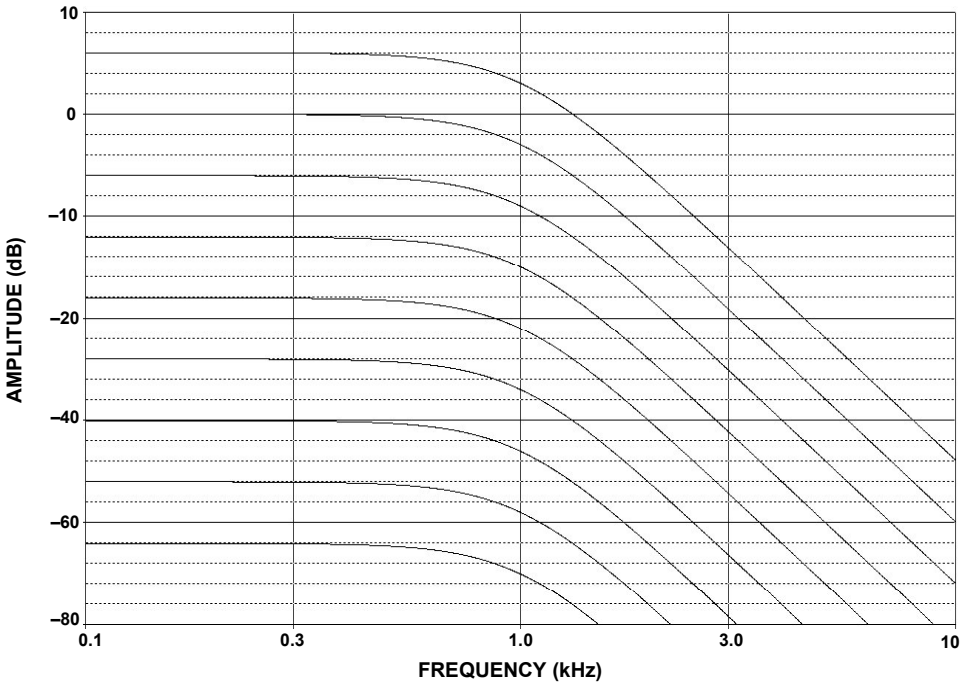

Figure 5-115: *Gain variation vs. DAC control word*

One limitation of this design is that the frequency is dependent on the ladder resistance of the DAC. This particular parameter is not controlled. DACs are trimmed so that the ratios of the resistors, not their absolute values, are controlled. In the case of the AD7528, the typical value is 11kΩ. It is specified as 8kΩ min. and 15kΩ max. A simple modification of the circuit can eliminate this issue. The cost is 2 more op amps (Figure 5-116). In this case, the effective resistor value is set by the fixed resistors rather than the DAC's resistance. Since there are 2 integrators the extra inversions caused by the added op amps cancel.

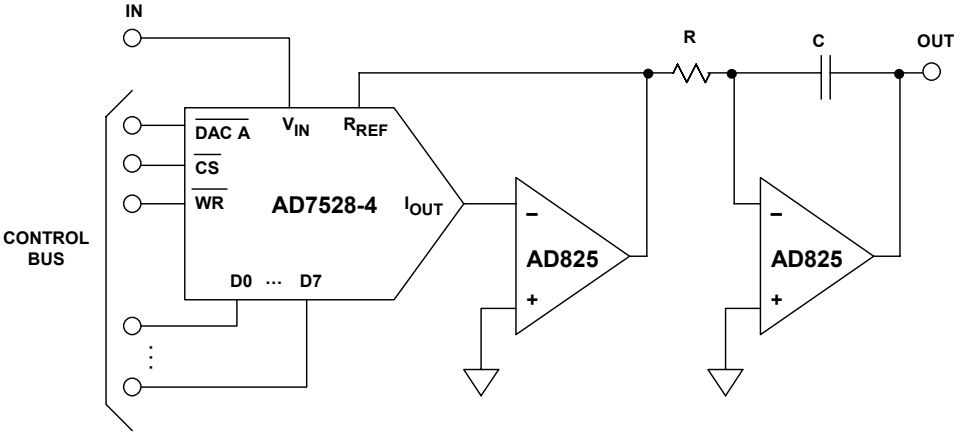

Figure 5-116: *Improved digitally variable integrator*

As a side note, the multiplying DACs could be replaced by analog multipliers. In this case the control would obviously be an analog rather than a digital signal. We also could just as easily have used a digital pot in place of the MDACs. The difference is that instead of increasing the effective resistance, the value of the pot would be the maximum.

60 Hz Notch Filter

A very common problem in instrumentation is that of interference of the telemetry that is to be measured. One of the primary sources of this interference is the power line. This is particularly true of high impedance circuits. Another path for this noise is ground loops. One possible solution is to use a notch filter to remove the 60Hz. component. Since this is a single frequency interference, the Twin-T circuit will be used.

Since the maximum attenuation is desired and the minimum notch width is desired, the maximum Q of the circuit is desired. This means the maximum amount of positive feedback is used (R5 open and R4 shorted). Due to the high impedance of the network, a FET input op amp is used.

The filter is designed using Figure 5-78. The schematic is shown in Figure 5-117 and the response in Figure 5-118.

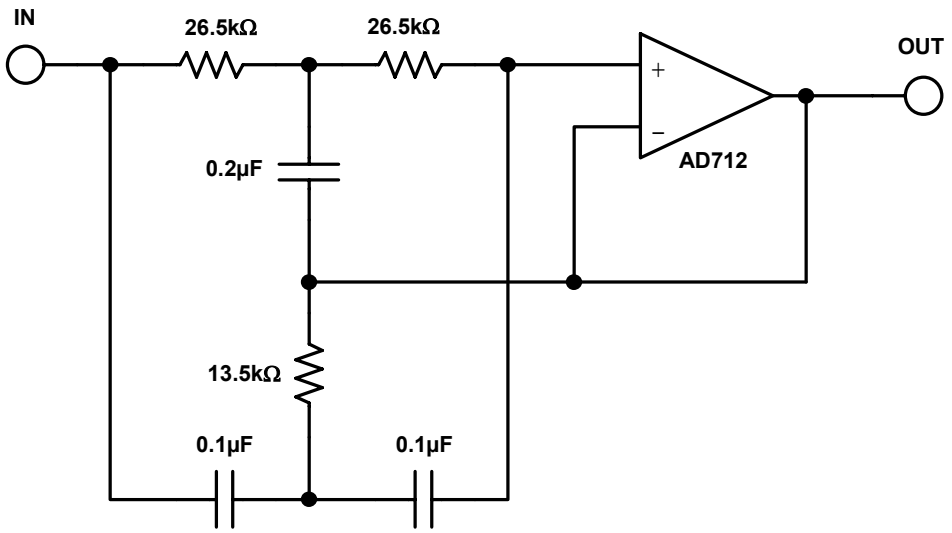

Figure 5-117: *60 Hz Twin-T notch filter*

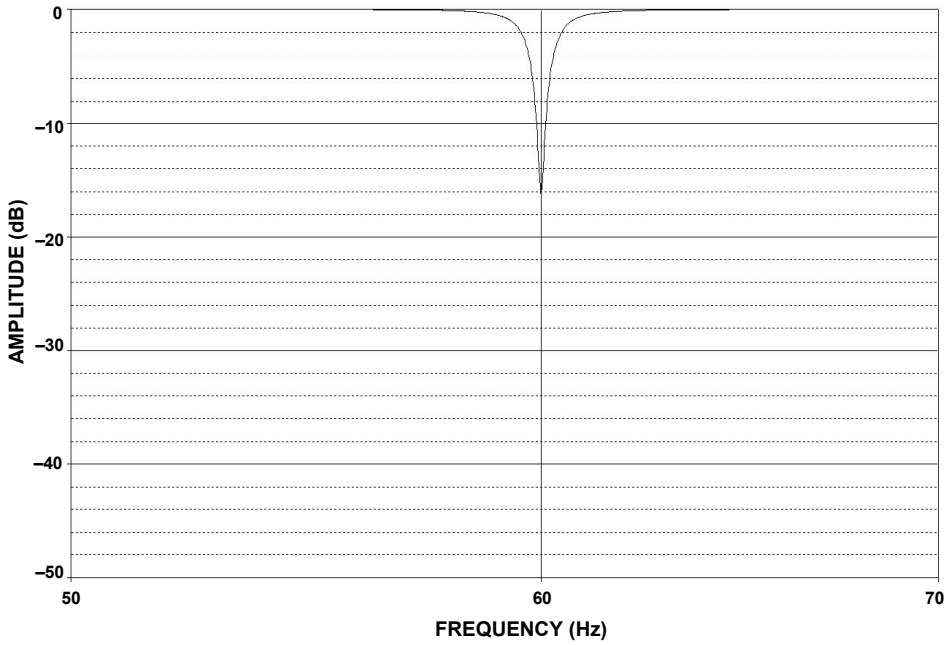

Figure 5-118: *60 Hz notch response*

CHAPTER REFERENCES:

1. A. I. Zverev, **Handbook of Filter Synthesis**, John Wiley, 1967.

2. A. B. Williams, **Electronic Filter Design Handbook**, McGraw-Hill, 1981, ISBN: 0-07-070430-9.

3. M. E. Van Valkenburg, **Analog Filter Design**, Holt, Rinehart & Winston, 1982

4. M. E. Van Valkenburg, **Introduction to Modern Network Synthesis**, John Wiley and Sons, 1960.

5. Zverev and H. J. Blinchikoff, **Filtering in the Time and Frequency Domain**, John Wiley and Sons, 1976.

6. S. Franco, **Design with Operational Amplifiers and Analog Integrated Circuits**, McGraw-Hill 1988, ISBN: 0-07-021799-8.

7. W. Cauer, **Synthesis of Linear Communications Networks**, McGraw-Hill, New York, 1958.

8. Budak, **Passive and Active Network Analysis and Synthesis**, Houghton Mifflin Company, Boston, 1974.

9. L. P. Huelsman and P. E. Allen, **Introduction to the Theory and Design of Active Filters**, McGraw Hill, 1980, ISBN: 0-07-030854-3.

10. R. W. Daniels, **Approximation Methods for Electronic Filter Design**, McGraw-Hill, New York, 1974.

11. J. Tow, "Active RC Filters – a State-space Realization," **Proc. IEEE**, 1968, vol.56, pp. 1137-1139.

12. L.C. Thomas, "The Biquad: Part I – Some Practical Design Considerations," **IEEE Trans. Circuits and Systems**, Vol. CAS-18, 1971, pp. 350-357.

13. L.C. Thomas, "The Biquad: Part I – A Multipurpose Active Filtering System," **IEEE Trans. Circuits and Systems**, Vol. CAS-18, 1971, pp. 358-361.

14. R. P. Sallen and E. L. Key, "A Practical Method of Designing RC Active Filters," **IRE Trans. Circuit Theory**, Vol. CT-2, 1955, pp. 74-85.

15. P. R. Geffe, "How to Build High-Quality Filters out of Low-Quality Parts," **Electronics**, Nov. 1976, pp. 111-113.

16. P. R. Geffe, "Designers Guide to Active Bandpass Filters," **EDN**, Apr. 5 1974, pp. 46-52.

17. T. Delyiannis, "High-Q Factor Circuit with Reduced Sensitivity," **Electronics Letters**, 4, Dec. 1968, pp. 577.

18. J. J. Friend, "A Single Operational-Amplifier Biquadratic Filter Section," **IEEE ISCT Digest Technical Papers**, 1970 pp. 189.

19. L. Storch, "Synthesis of Constant-Time-Delay Ladder Networks Using Bessel Polynomials," **Proceedings of IRE**, Vol. 42, 1954, pp. 1666-1675.

20. K. W. Henderson and W. H. Kautz, "Transient Response of Conventional Filters," **IRE Trans. Circuit Theory**, Vol. CT-5, 1958, pp. 333-347.

21. J. R. Bainter, "Active Filter Has Stable Notch and Response Can be Regulated," **Electronics**, Oct. 2 1975, pp.115-117.

22. S. A. Boctor, "Single Amplifier Functionally Tunable Low-Pass Notch Filter," **IEEE Trans. Circuits and Systems**, Vol. CAS-22, 1975, pp. 875-881.

23. S. A. Boctor, "A Novel second-order canonical RC-Active Realization of High-Pass-Notch Filter," **Proc. 1974 IEEE Int. Symp. Circuits and Systems**, pp. 640-644.

24. L. T. Burton, "Network Transfer Function Using the Concept of Frequency Dependant Negative Resistance," **IEEE Trans. Circuit Theory**, Vol. CT-16, 1969, pp. 406-408.

25. L. T. Burton and D. Trefleaven, "Active Filter Design Using General Impedance Converters," **EDN**, Feb. 1973, pp.68-75.

26. H. Zumbahlen, "A New Outboard DAC, Part 2," **Audio Electronics**, Jan. 1997, pp. 26-32, 42.

27. M. Williamsen, "Notch-Filter Design," **Audio Electronics**, Jan. 2000, pp. 10-17.

28. W. Jung, "Bootstrapped IC Substrate Lowers Distortion in JFET Op Amps," **Analog Devices AN232**.

29. H. Zumbahlen, "Passive and Active Filtering," **Analog Devices AN281**.

30. P. Toomey & W. Hunt, "AD7528 Dual 8-Bit CMOS DAC," **Analog Devices AN318**.

31. W. Slattery, "8th Order Programmable Lowpass Analog Filter Using 12-Bit DACs," **Analog Devices AN209**.

32. **CMOS DAC Application Guide**, Analog Devices.