◆ H Op Amp History
- 1 Introduction
- 2 Vacuum Tube Op Amps
- 3 Solid-State Modular and Hybrid Op Amps
- 4 IC Op Amps

1 Op Amp Basics
2 Specialty Amplifiers
3 Using Op Amps with Data Converters
4 Sensor Signal Conditioning
5 Analog Filters
6 Signal Amplifiers
7 Hardware and Housekeeping Techniques

▶ OP AMP APPLICATIONS

CHAPTER H: OP AMP HISTORY

Walt Jung

The theme of this chapter is to provide the reader with a more comprehensive *historical background of the operational amplifier* (op amp for short— see below). This story begins back in the vacuum tube era and continues until today (2002). While most of today's op amp users are probably somewhat familiar with integrated circuit (IC) op amp history, considerably fewer are familiar with the non-IC solid-state op amp. And, even more likely, very few are familiar with the origins of the op amp in vacuum tube form, even if they are old enough to have used some of those devices in the 50's or 60's. This chapter of the book addresses these issues, with a narrative of not only how op amps originated and evolved, but also what key factors gave rise to the op amp's origin in the first place. [1]

A developmental background of the op amp begins early in the 20th century, starting with certain fundamental beginnings. Of these, there were two key inventions very early in the century. The first was not an amplifier, but a two-element vacuum tube-based rectifier, the "Fleming diode," by J. A. Fleming, patented in 1904 (see Reference 1). This was an evolutionary step beyond Edison's filament-based lamp, by virtue of the addition of a *plate* electrode, which (when biased positively) captured electrons emitted from the filament (*cathode*). Since this device passed current in one direction only, it performed a rectification function. This patent was the culmination of Fleming's earlier work in the late years of the 19th century.

A second development (and one more germane to amplification), was the invention of the three-element triode vacuum tube by Lee De Forest, the "Audion," in 1906. This was the first active device capable of signal amplification (see Reference 2). De Forest added a control grid electrode, between the diode filament and plate, and an amplifier device was born. While these first tubes of the 20th century had their drawbacks, the world of modern electronics was being born, and more key developments were soon to follow.

For op amps, the invention of the feedback amplifier principle at Bell Telephone Laboratories (Bell Labs) during the late 1920's and early 30's was truly an enabling development. This landmark invention led directly to the first phase of vacuum tube op amps, a general-purpose form of feedback amplifier using vacuum tubes, beginning in the very early 1940's and continuing through the World War II years.

After World War II, there was then a transition period, as vacuum tube op amps were improved and refined, at least in circuit terms. But, these amplifiers were fundamentally large, bulky, power-hungry devices. So, after a decade or more, vacuum tube op amps began to be replaced by miniaturized solid-state op amps, in the 1950's and 1960's.

[1] Note— this chapter of the book is not necessarily required for the use of op amps, and can be optionally skipped. Nevertheless, it should offer interesting background reading, as it provides a greater appreciation of current devices once their beginnings are more fully understood.

A final major transitional phase of op amp history began with the development of the first IC op amp, in the mid 1960's. Once IC technology became widely established, things moved quickly through the latter of the 20th century years, with milestone after milestone of progress being made in device performance.

A Definition for the Fledgling Op Amp

Although it may seem inappropriate to define what an op amp was in those early days at this point in the book, it is necessary to do so, albeit briefly. This is because what is commonly known today as an op amp is different in some regards from the very first op amps. The introductory section of Chapter 1, where the discussion is more closely oriented around today's op amp definition, supplements the meaning below.

The very first op amps were not even called such, nor were they even called "operational amplifiers". The naming of the device came after the war years, in 1947.

For this historical discussion, it may be more clear to call one of these first op amps a *general-purpose, DC-coupled, high gain, inverting feedback amplifier*. This of course is a loose definition, but it nevertheless fits what transpired.

- *General-purpose* may be interpreted to mean that such an amplifier (or multiple amplifiers) operates on bipolar power supplies, with input and output signal ranges centered around 0V (ground).

- *DC-coupled* response implies that the signals handled include steady-state or DC potentials, as well as AC signals.

- *High gain* implies a magnitude of DC gain in excess of 1000× (60dB) or more, as may be sufficient to make system errors low when driving a rated load impedance.

- *Inverting mode operation* means that this feedback amplifier had, in effect, one signal input node, with the signal return being understood as ground or common. Multiple signals were summed at this input through resistors, along with the feedback signal, via another resistor. *Note that this single-ended operating mode is a major distinction from today's differential input op amps.* Operation of these first feedback amplifiers in only a single-ended mode was, in fact, destined to continue for many years before differential input operation became more widespread.

- *A feedback amplifier* of this type could be used in a variety of ways, dependent upon the nature of the feedback element used with it. This capability of satisfying a variety of applications was later to give rise to the name.

So, given this background, op amp history can now be explored.

SECTION H-1: INTRODUCTION

Setting the Stage for the Op Amp

Op amps are high gain amplifiers, and are used almost invariably with overall loop feedback. The principle of the feedback amplifier has to rank as one of the more notable developments 20th century— right up there with the automobile or airplane for breadth of utility, and general value to engineering. And, most importantly, such feedback systems, although originally conceived as a solution to a communications problem, operate today in more diverse situations. This is a clear tribute to the concept's fundamental value.

Today the application of negative feedback is so common that it is often taken for granted. But this wasn't always the case. Working as a young Western Electric Company engineer on telephone channel amplifiers, Harold S. Black first developed feedback amplifier principles. Note that this was far from a brief inspirational effort, or narrow in scope. In fact it took some nine years after the broadly written 1928 patent application, until the 1937 issuance (see Reference 3). Additionally, Black outlined the concepts in a **Bell System Technical Journal** article, and, much later, in a 50th anniversary piece where he described the overall timeline of these efforts (see References 4 and 5).

But, like circumstances surrounding other key inventions, there were others working on negative feedback amplifier applications. One example would be Paul Voigt's mid-1920's work (see References 6 and 7). [1] The prolific British inventor Alan Blumlein did 1930's feedback amplifier work, using it to control amplifier output impedance (see Reference 8). [2] Finally, a research group at N. V. Philips in the Netherlands is said to have been exploring feedback amplifiers within roughly the same time frame as Black (late twenties to early thirties). In 1937 B. D. H. Tellegen published a paper on feedback amplifiers, with attributions to K. Posthumus and Black (see References 9 and 10). [3] In Tellegen's paper are the same equations as those within Black's (substituting A for Black's μ).

But, it isn't the purpose here to challenge Black's work, rather to note that sometimes overlapping but independent parallel developments occur, even for major inventions. Other examples will be seen of this shortly, in the developments of differential amplifier techniques. In the long run, a broad-based, widely accepted body of work tends to be seen as the more significant effort. In the case of Black's feedback amplifier, there is no doubt that it is a most significant effort. It is also both broad-based and widely accepted.

There are also many earlier *positive* feedback uses; a summary is found in Reference 11.

---

[1] Some suggest Paul Voigt as the true feedback amplifier inventor, not Black (see Ref. 6, 7). Examination of Voigt's UK patent 231,972 fails to show a feedback amplifier theory comparable to Black's detailed exposition of Ref. 3 and 4. In fact, there are no equations presented to describe Voigt's system behavior.
[2] Blumlein's UK patent 425,553 is focused on controlling amplifier output impedance through voltage and/or current feedback, not addressing in detail the broader ramifications of feedback.
[3] Examination of UK patent 323,823 fails to find reference to K. Posthumus, apparently a practice with N. V. Philips UK patents of that period. The patent does show a rudimentary feedback amplifier, but unfortunately the overall clarity is marred by various revisions and corrections, to both text and figures.

Black's Feedback Amplifier

The basis of Black's feedback amplifier lies in the application of a portion of the output back to the input, so as to reduce the overall gain. When properly applied, this provides the resultant amplifier with characteristics of enhanced gain stability, greater bandwidth, lower distortion, and usefully modified stage input and output impedance(s).

A block diagram of Black's basic feedback amplifier system is shown in Figure H-1 below. Note that Black's "μ" for a forward gain symbol is today typically replaced by "A". As so used, the feedback network β defines the overall transfer expression of the amplifier. Thus a few passive components, typically just resistors or sometimes reactive networks, set the gain and frequency response characteristics of this system.

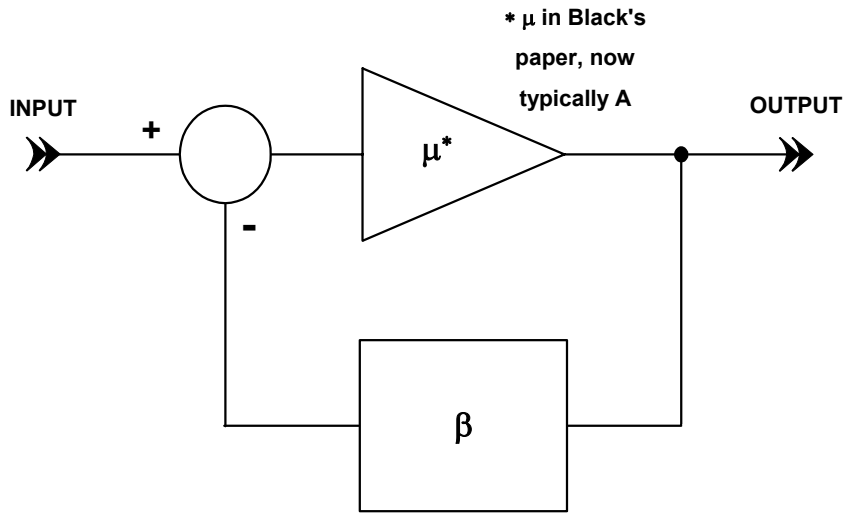

Figure H-1: *A block diagram of Black's feedback amplifier, comprised of a forward gain "μ" and a feedback path of "β".*

At the time Black's work was initiated, the problem he faced was how to make practical a series signal connection of hundreds (if not thousands) of telephone system repeater amplifiers using directly heated triode tubes. The magnitude of this problem becomes obvious when it is considered that each amplifier alone couldn't be held more stable to less than 1dB of gain variation, and even under the best of conditions, the stage distortion was unacceptable.

Black's feedback amplifier invention led not just to better repeater amplifiers for Western Electric, but to countless millions of other widely varying applications. Almost every op amp application ever conceived uses feedback. So, given the fact that modern op amp types number in the dozens (in individual models, many thousands), it isn't hard to appreciate the importance feedback principles take on for today's designs.

But, a significant reason that Black's feedback concept took root and prospered wasn't simply because it was a useful and sound idea. That it was, but it was also *different*, and many experienced engineers fought the idea of "throwing away gain." However, Black did have help in selling the radically new concept, help that was available to few other inventors. By this help what is meant is that he had the full backing of the

Bell Telephone System, and all that this implied towards forging and promoting a new technical concept. An interesting narrative of the feedback amplifier's development and the interplay of Black and his coworkers can be found in David Mindell's paper, "Opening Black's Box: Rethinking Feedback's Myth of Origin" (see Reference 12).

The 1930 and 1940 years at Bell Labs could very well be regarded as golden years. They produced not just Black's feedback amplifier, but also other key technical developments that expanded and supported the amplifier. This support came from some of the period's finest engineers— not just the finest Bell Labs engineers, but the world's finest.

To quote Black's own words on the Bell Labs support activity related to his landmark invention, *"Within a few years, Harry Nyquist would publish his generalized rule for avoiding instability in a feedback amplifier, and Hendrick W. Bode would spearhead the development of systematic techniques of design whereby one could get the most out of a specified situation and still satisfy Nyquist's criterion."* (see Reference 5, again).

The feedback amplifier papers and patents of Harry Nyquist and Hendrick Bode (see References 13 and 14), taken along with the body of Black's original work, form solid foundations for modern feedback amplifier design. Bode later published a classic feedback amplifier textbook (see Reference 15). Later on, he also gave a talk summarizing his views on the feedback amplifier's development (see Reference 16).

In addition to his famous stability criteria, Nyquist also supplied circuit-level hardware concepts, such as a patent on direct-coupled amplifier inter-stage coupling (see Reference 17). This idea was later to become a standard coupling method for vacuum tube op amps.

Outside Bell Labs, other engineers also were working on feedback amplifier applications of their own, affirming the concept in diverse practical applications. Frederick Terman was among the first to publicize the concept for AC feedback amplifiers, in a 1938 article (see Reference 18).

For single-ended signal path DC amplifiers, there were numerous landmark papers during the World War II period. Stewart Miller's 1941 article offered techniques for high and stable gain with response to DC (see Reference 19). This article introduced what later became a standard gain stabilization concept, called "cathode compensation," where a second dual triode section is used for desensitization of heater voltage variations. Ginzton's 1944 amplifier article employed Miller's cathode compensation, as well as Nyquist's level shifting method (see Reference 20). The level shifter is attributed to Brubaker (who apparently duplicated Nyquist's earlier work). Artzt's 1945 article surveys various DC amplifier techniques, with emphasis on stability (see Reference 21).

After World War II, the MIT Radiation Laboratory textbook series documented many valuable electronic techniques, including a volume dedicated to vacuum tube amplifiers. The classic Valley-Wallman volume number 18 is not only generally devoted to amplifiers, it includes a chapter on DC amplifiers (see Reference 22). While this book doesn't discuss op amps by name, it does include DC feedback circuitry examples. Op amps did exist, and had even been named as of 1947, just prior to the book's publication.

REFERENCES: INTRODUCTION

(Note— appended annotations indicate relevance to op amp history.)

Early Vacuum Tube and Feedback Amplifier Developments

1. J. A. Fleming, "Instrument for Converting Alternating Electric Currents into Continuous Currents," **US Patent 803,684**, filed April 19, 1905, issued Nov. 7, 1905. See also UK Patent 24,850, filed Nov. 16, 1904. *(The 'Fleming diode' or the first vacuum tube rectifier).*

2. Lee De Forest, "Device for Amplifying Feeble Electrical Currents," **US Patent 841,387**, filed October 25, 1906, issued January 15, 1907 *(The triode vacuum tube, or 'Audion', the first amplifying device).*

3. H. S. Black, "Wave Translation System," **US Patent 2,102,671**, filed August 8, 1928, issued December 21, 1937 *(The basis of feedback amplifier systems).*

4. H. S. Black, "Stabilized Feedback Amplifiers," **Bell System Technical Journal**, Vol. 13, No. 1, January 1934, pp. 1-18 *(A practical summary of feedback amplifier systems).*

5. Harold S. Black, "Inventing the Negative Feedback Amplifier," **IEEE Spectrum**, December, 1977 *(Inventor's 50th anniversary story on the invention of the feedback amplifier).*

6. Geoffrey Horn, "Voigt, not Black," **Stereophile**, Letters, April 1998, pp. 18, 21.

7. Paul G. A. H. Voigt, "Improvements in or Relating to Thermionic Amplifying Circuits for Telephony," **UK Patent 231,972**, filed January 29, 1924, issued April 16, 1925. *(A motional feedback loudspeaker/amplifier system).*

8. A. D. Blumlein, "Improvements in and relating to Thermionic Valve Amplifiers," **UK Patent 425,553**, filed Sept. 8, 1933, issued March 18, 1935. *(Use of feedback to control amplifier output impedance).*

9. B. D. H. Tellegen, "Inverse Feedback," **Philips Technical Review**, Vol. 2, No. 10, October, 1937. *(Another feedback amplifier development, generally paralleling Black's).*

10. "Improvements in or Relating to Arrangements for Amplifying Electrical Oscillations," **UK Patent 323,823**, filed October 18, 1928, issued January 16, 1930 (original filing), filed July 18, 1929, final approval January 1938 and February 1939 (amended filing). *(A simple one stage feedback amplifier system).*

11. D. G. Tucker, "The History of Positive Feedback," **Radio and Electronic Engineer**, Vol. 42, No. 2, February 1972, pp. 69-80.

12. David A. Mindell, "Opening Black's Box: Rethinking Feedback's Myth of Origin," **Technology and Culture**, Vol. 41, July, 2000, pp. 405-434. *(A perspective discussion of the inter-related events and cultures surrounding the feedback amplifier's invention).*

13. Harry Nyquist, "Regeneration Theory," **Bell System Technical Journal**, Vol. 11, No. 3, July, 1932, pp. 126-147. See also: "Regenerative Amplifier," **US Patent 1,915,440**, filed May 1, 1930, issued June 27, 1933 *(The prediction of feedback amplifier stability by means of circular gain-phase plots).*

14. Hendrick Bode, "Relations Between Attenuation and Phase In Feedback Amplifier Design," **Bell System Technical Journal**, Vol. 19, No. 3, July, 1940. See also: "Amplifier," **US Patent 2,123,178**, filed June 22, 1937, issued July 12, 1938. *(The prediction of feedback amplifier stability by means of semi-log gain-phase plots).*

15. Hendrick Bode, **Network Analysis and Feedback Amplifier Design**, Van Nostrand, 1945. *(Bode's classic text on network analysis, as it relates to the design of feedback amplifiers).*

16. Hendrick Bode, "Feedback— the History of an Idea," **Proceedings of the Symposium on Active Networks and Feedback Systems**, Polytechnic Press, 1960. Reprinted within **Selected Papers on Mathematical Trends in Control Theory**, Dover Books, 1964. *(A perspective historical summary of the author's thoughts on the development of the feedback amplifier).*

17. Harry Nyquist, "Distortionless Amplifying System," **US Patent 1,751,527**, filed November 24, 1926, issued March 25, 1930. *(A means of direct-coupling multiple amplifier stages via resistance networks for inter-stage coupling).*

18. F. E. Terman, "Feedback Amplifier Design," **Electronics**, January 1937, pp. 12-15, 50. *(Some practical AC-coupled topologies for implementing feedback amplifiers).*

19. Stewart E. Miller, "Sensitive DC Amplifier with AC Operation," **Electronics**, November, 1941, pp. 27-31, 106-109. *(Design example of a stable, high-gain direct-coupled amplifier including 'cathode-compensation' against variations in filament voltage, use of glow tube inter-stage coupling, and a stable line-operated DC supply).*

20. Edward L. Ginzton, "DC Amplifier Design Techniques," **Electronics**, March 1944, pp. 98-102 *(Various design means for improving direct-coupled amplifiers).*

21. Maurice Artzt, "Survey of DC Amplifiers," **Electronics**, August, 1945, pp. 112-118. *(Survey of direct-coupled amplifier designs, both single-ended and differential, with emphasis on high stability).*

22. George E. Valley, Jr., Henry Wallman, **Vacuum Tube Amplifiers**, MIT Radiation Labs Series No. 18, McGraw-Hill, 1948. *(A classic WWII Radiation Lab development team textbook. Chapter 11, by John W. Gray, deals with direct-coupled amplifiers).*

ACKNOWLEDGEMENTS:

Many helpful comments were received during the preparation of this section, and all are very much appreciated.

Particularly useful to this project was reference information received from vacuum tube historian Gary Longrie. Gary provided information on early vacuum tube amplifiers, the feedback experiments of B. D. H. Tellegen at N. V. Philips, and he also made numerous improvement comments on the manuscript.

Mike Hummel provided the reference to Alan Blumlein's patent of a negative feedback amplifier.

Dan Sheingold provided constructive comments on the manuscript.

Bob Milne offered many comments towards improvement of the manuscript.

NOTES:

SECTION 2: VACUUM TUBE OP AMPS

Development of Differential Amplifier Techniques

While amplifiers using both feedback and non-feedback topologies were being refined in the late 1930's and throughout the 1940's, there were some very interesting developments within the realm of differential amplifiers.

Today's op amps utilize differential topologies to a high degree, but the reader should understand that this wasn't universally so, back in the days of vacuum tube amplifiers. In fact, vacuum tube op amp topologies that utilized differential techniques fully never really became well established before the breed began dying off. Nevertheless, it is still a useful thing to examine some key differential amplifier publications up through about 1950, at which point it represented a maturing of the art. The fully differential, defined gain precision DC amplifier was of course, the forerunner of what we know today as the *instrumentation amplifier* (see Chapter 2 of this book).

The earliest vacuum tube differential amplifiers were reported well back in the 1930s, and evolved steadily over the next 15-20 years. Many of these authors addressed the problems of low-level instrumentation amplifier circuitry used in obtaining signals from living tissue, thus the apparatus involved was often called a "biological amplifier".

One of the early authors in this field was B. H. C. Matthews, writing on a special differential input amplifier in 1934 (see Reference 1). Matthews' amplifier did indeed have differential inputs, but since the common cathodes were tied directly to the power supply common, it wasn't optimized towards minimizing response to common-mode (CM) inputs. Note that in those days CM signals were often referred to as *push-push* signals, to denote signals in-phase at both inputs.

Alan Blumlein's UK patent 482,470 of 1936 went a step further in this regard, by biasing the common-cathodes of a differential pair through a common resistance to ground (see dual triodes within Fig. 2 of Reference 2). Blumlein's patent was concerned with wideband signals, not biological ones, using AC-coupling. Nevertheless, it was a distinct improvement over the Matthews amplifier, since it provided bias conditions more amenable to CM signal rejection.

In 1937 Franklin Offner discussed a variety of differential amplifiers, and among them is found one similar to Blumlein's configuration (see Fig. 3 of Reference 3). Like those of Blumlein, Offner's circuits also used AC-coupling. A useful technique that appears in this paper is the use of *common-mode feedback* to increase CM rejection (Fig. 4 of Reference 3). To enable this, a CM sample from a downstream stage is fed back to an earlier stage. This feedback decreases the CM gain, and thus it improves CM rejection.

Otto Schmitt discussed a common-cathode, cathodes-to-common dual pentode circuit in 1937 (see Reference 4). This circuit, while novel in the operation of the pentode screens, didn't minimize response to CM input signals (similar to the Matthews circuit, above).

In 1938 J. F. Toennies discussed what might be the first form of what has subsequently come to be known as the *long-tailed pair* (see Reference 5). In this form of differential input amplifier, the push-pull input signals are applied to the dual grids of the stage, and the common-cathodes are returned to a high negative voltage, through a high value common resistance. Toennies' fundamental circuit (Fig. 1 of Reference 5) used dual triodes with a plate supply of 135V, and a cathode bias supply of –90V.

The action of the large value cathode resistance biased to a high negative voltage acts to optimize the differential coupling of the stage, while at the same time minimizing the CM response, as noted in Figure H-2 below. This may intuitively be appreciated by considering the effect of the large cathode resistance to a high negative voltage $-V_S$, as in B, versus the simple cathode-coupled pair as in A. In A the cathode resistance R_K is returned to ground, the same point common to the grids (the return for the $+V_S$ supply).

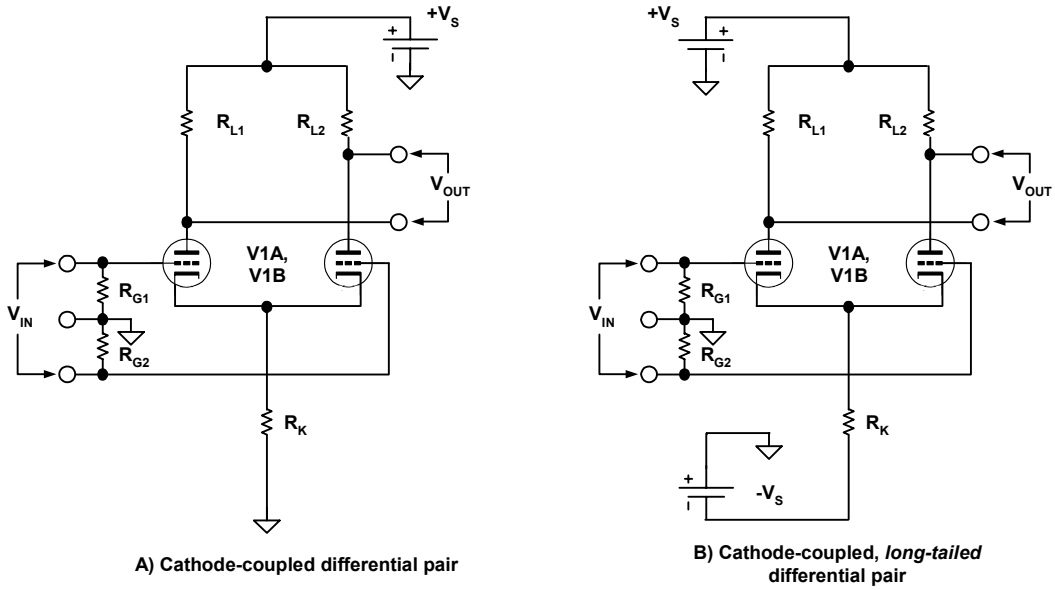

Figure H-2: *A comparison of simple differential pair biasing in A (left) and long-tailed biasing as in B (right)*

The constant current action of the long-tailed biasing shown in H-2B tends to minimize response to CM inputs (while not impairing differential response). Later on, some more advanced designs were even to go as far as using a pentode tube for the "long tail" common-cathode bias, capitalizing on a pentode's high incremental resistance.

Otto Schmitt also discussed a long-tailed pair form of amplifier in 1938 (see Reference 6). The context of his discussion was not so much aimed towards optimizing CM rejection, but rather using such a stage as a phase inverter. With one input grid of such a stage grounded, and the opposite grid driven in single-ended fashion, out-of-phase signals result with equal plate load resistors. Schmitt was a prolific inventor, and was to return later on (below).

Lionel Jofeh, within UK patent 529,044 in 1939, offered a complete catalog of eight forms of cathode-coupled amplifiers (see Reference 7).

Harold Goldberg presented a complete multi-stage, direct-coupled differential amplifier in 1940 (see Reference 8). Using power pentodes within a unique low voltage differential input stage, Goldberg reported an equivalent input noise of 2μV for the circuit. This work parallels some of the earlier work mentioned above, apparently developed independently.

In 1941, Otto Schmitt published another work on the differential amplifier topic, going into some detail of analysis (see Reference 9). In this work he clearly outlines the advantages of the long-tailed pair, in terms of the stage's phase-inversion properties. He also covers the case of a degenerated long-tailed pair, where a common cathode-cathode resistance is used for gain adjustment, and the individual cathodes are biased to a negative voltage with resistors of values twice that of a single cathode-coupled stage.

Walther Richter wrote on cathode follower and differential circuits in 1943 (see Reference 10). While primarily focused on single-ended cathode followers, this article also does an analysis of the long-tailed pair.

Harold Goldberg wrote again on his multi-stage differential amplifier, in 1944 (see Reference 11). The 1944 version still used batteries for most of the power, but did add a pentode to supply the bias current of the first stage long-tailed pair.

Writing in 1944, G. Robert Mezger offered a differential amplifier design with a new method of interstage level-shift coupling (see Reference 12). Previous designs had used either a resistive level shift like Nyquist, or the more recent glow-tube technique of Miller. Mezger's design used a 12J5 triode as the bottom level shift element, which acts as constant current source. Working against a fixed resistance at the top, this allows a wideband level shift. Good overall stability was reported in a design that used both differential and CM feedback. Regulation was used for plate and critical heater circuits.

Franklin Offner wrote a letter to the editor in 1945, expressing dissatisfaction with other differential amplifier authors (see Reference 13). In this work he comments on the work of Toennies (Reference 5, again), …"merely an application of in-phase degeneration by the use of a large cathode resistor,"… Offner also overlooked Blumlein's patent.

D. H. Parnum published a two-part survey of differential amplifier techniques, in 1945 (see Reference 14). This work analyzed some previously published designs, and presented two differential-throughout amplifier examples, both DC and AC-coupled.

In a comprehensive study of differential amplifier designs from 1947, Denis L. Johnston presented a three-part article on design techniques, with a finished design example (see Reference 15). This article is notable not only for the wealth of detailed information, but it also contains a bibliography of 61 references to related works.

The input stage of Johnston's design example amplifier used an input long-tailed pair based on the 6CS7 dual triode, with the cathode current supplied by a 6J7G pentode (see

Fig. 10a of Reference 15). The second stage was also a long-tailed pair, directly coupled to the first stage, with CM feedback. Multiple stages of supply regulation are used.

D. H. Parnum also published another work on differential amplifiers, in 1950 (see Reference 16). In this paper he presented a critique of the input stage design of the Johnston design (Reference 15, again), pointing out necessary conditions for optimizing CM rejection for multiple stage amplifiers.

The P. O. Bishop and E. J. Harris design paper of 1950 is similar in overall scope to the Johnston work noted above (see Reference 17). It reviews the work of many other designers in the biological area, and presents a sophisticated example design. In this circuit (Fig. 3 of Reference 17) a 954 pentode pair is used for input cathode followers, driving a 6J6 dual triode long-tailed pair. Both the input stages as well as the next two stages used 12SH7 pentodes for the tail current sources. Highly stabilized power supplies are used for the plate supplies, with critical heaters also stabilized.

Richard McFee published some modifications useful to improve the CM rejection of a single dual triode stage, in 1950 (see Reference 18).

One of the better overview papers for this body of work appeared in 1950, authored by Harry Grundfest (see Reference 19). This paper also gives greater insight into how the biological amplifiers were being used at this time, and offers many references to other differential amplifier work.

It is notable that Grundfest credits Offner (Reference 3, again) with the invention of the long-tailed pair. However, it can be argued that it isn't apparent from Offner's schematics that a true long-tailed pair is actually being used (there being no negative supply for the cathode resistance). The type of biasing that Offner (and Blumlein) use is a simple resistor from the common cathodes to circuit common, which would typically have just a few volts of bias across it, and, more importantly, would have a value roughly comparable in magnitude to the cathode impedance.

Unfortunately, Grundfest also overlooks Blumlein (Reference 2, again), who preceded Offner with a similar circuit. This similarity is apparent if one compares Blumlein's Fig. 2 against Offner's Fig. 3, in terms of how the biasing is established.

One of the deepest technical discussions on the topic of DC differential amplifiers can be found in C. M.Verhagen's paper of 1953 (see Reference 20). Verhagen goes into the electron physics of the vacuum tube itself, as well as the detailed circuitry around it, as to how they both effect stability of operation. This paper includes detailed mathematical expressions and critiques of prior work. Many other topical papers are referenced, including some of those above.

The above discussion is meant as a prefacing overview of DC differential amplifiers, as this technology may impact op amp designs. It isn't totally comprehensive, so there are likely other useful papers on the topic. Nevertheless, this discussion should serve to orient readers on many of the general design practices for stable DC differential amplifiers.

Op Amp and Analog Computing Developments

Some of the differential amplifier work described above did find its way into op amps. But, there was also much other significant amplifier work being done, at Bell Labs and elsewhere in the US, as well around the world. The narrative of op amp development now focuses on the thread of *analog computing*, which was the first op amp application.

In the late 1930's George A. Philbrick, at Foxboro Corporation, was developing analog process control simulation circuits with vacuum tubes and passive parts. Philbrick developed many interesting circuits, and some were op amp forebears (see Reference 21).

In fact, within this article he describes a single tube circuit that performs some op amp functions, in Figure 3A. This directly coupled circuit develops an operating relationship between input and output voltages, producing a voltage output proportional to the ratio of two impedances. While this circuit (using floating batteries for power) can't be termed a general-purpose op amp circuit, it nevertheless demonstrated some of the working principles. In Reference 22 Per Holst further describes this early Philbrick work. Within a decade Philbrick was to start his own company supplying vacuum tube op amps and other components used within analog simulation schemes (see below).

But, the very first vacuum tube amplifiers fitting the introductory section op amp definition came about early in the 1940's wartime period. The overall context was the use of this amplifier as a building block, within the Bell Labs designed M9 gun director system used by WWII Allied Forces. These op amp circuits were general purpose, using bipolar supply voltages for power, handling bipolar input/output signals with respect to a common voltage (ground). As true to the definition, the overall transfer function was defined by the externally connected input and feedback impedances (more on this below).

These early amplifiers were part of a specialized analog computer system, which was designed to calculate proper gun aiming for fire upon enemy targets. The work on this project started in 1940, and was pioneered by Clarence A. Lovell, David Parkinson, and many other engineers of the Bell Labs staff. Their efforts have been chronicled in great detail by Higgins, et al, as well by James S. Small (see References 23 and 24).

This Bell Labs design project resulted in a prototype gun director system that was called the T10, first tested in December of 1941. While the T10 was the first sample gun director, in later production the gun director was known as the Western Electric M9 (see Reference 25). Further documentation of this work is found in US Patents 2,404,081 and 2,404,387 (see References 26 and 27), plus a related paper by Lovell (see Reference 28). The patents illustrate many common feedback amplifier examples in varied tasks.

However, in terms of an overall technical view of the M9, perhaps the most definitive discussion can be found within "Artillery Director," US Patent 2,493,183, by William Boghosian, Sidney Darlington, and Henry Och of Bell Labs (see Reference 29). This key document breaks down the design of the analog computation scheme into the numerous subsystems involved. Op amps can be found throughout the patent figures, performing functions of buffers, summers, differentiators, inverters, etc.

Karl Swartzel's Op Amp

In terms of op amp details, the Boghosian et al patent references another crucial patent document. And, many other Bell Labs M9-related patents, underscoring its seminal nature, also referenced this latter work. The patent in question here is US Patent 2,401,779, "Summing Amplifier" by Karl D. Swartzel Jr. of Bell Labs (see Reference 30), and a design that could well be the genesis of op amps. Ironically, Swartzel's work was never given due publicity by Bell Labs.[1] Filed May 1, 1941, it languished within the system during the war, finally being issued in 1946. Of course, the same thing could be said about many wartime patents— in fact many other Bell Labs patents met similar fates.

A schematic diagram for Swartzel's op amp is shown below in Figure H-3, which includes a table of values taken from the patent text. Although the context of the patent is an application as a summing amplifier, it is also obvious that this is a general purpose, high gain amplifier, externally configured for a variety of tasks by the use of suitable feedback components— the crux of the matter regarding the op amp function.

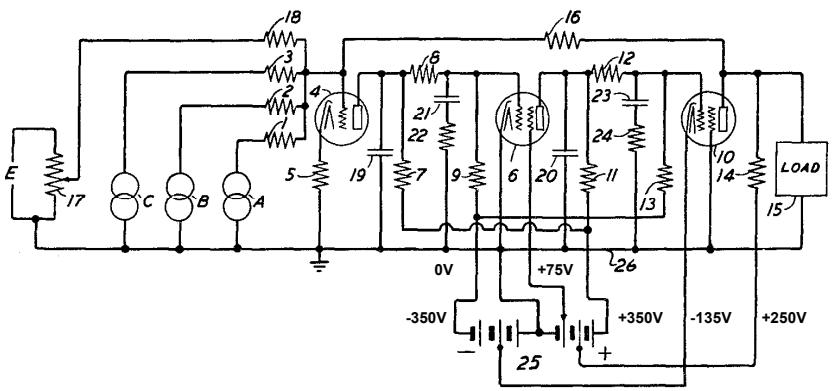

A) Schematic diagram

R1, R2, R3, R13, R16	1megΩ
R5	1.5kΩ
R7	0.5megΩ
R8	0.75megΩ
R9	2megΩ
R11	0.25megΩ
R12	1.25megΩ
R14, R15 (load)	6kΩ
R18	3megΩ
R22, R24	100kΩ
C19	0.25µF
C20	100pF
C21	1000pF
C23	0.03µF
V4	6SC7
V6	6SJ7
V10	6Y6G

B) Component values

Figure H-3: *Schematic diagram and component values for "Summing Amplifier" (US Patent 2,401,779, assigned to Bell Telephone Laboratories, Inc.)*

In the schematic of this "summing amplifier" there can be noted a number of key points. Three directly coupled tubes provided a high overall gain, with a net sign inversion with respect to the grid of input tube 4. Positive and negative power supplies are provided by the tapped battery, 25. The amplifier output swing at the load 15 is bipolar with respect to the common terminal, 26. In this instance of use, resistor R16 applies the feedback, and three signals are being summed via input resistors R1, R2, R3, with the input common to terminal 26. The input via resistor R18 was used for offset control.

The amplifier gain quoted in the patent was 60,000 (95dB), and as noted, the circuit could drive loads of 6kΩ, which is quite an achievement. It operated from supplies of ±350V,

[1] Bell Labs documented virtually everything on the M9 in its **Bell Laboratories Record**, as can be noted by the section references. But no op amp schematics were included in this long string of articles!

with intermediate voltages as noted. The inter-stage level shift networks are the form described by Nyquist, and there are several RC networks used for stabilization purposes.

Over time, there were changes made to this basic design, which will be described later in this section. The Swartzel op amp was truly a seminal work, as it allowed the creation of a complete, highly sophisticated analog computer system critical to WWII defense. It also spawned numerous other amplifier designs derived from its basic topology.

The M9 From A Bell Labs View

Because of a general embargo on the publication of defense-related technical information during WWII, there was a great deal of work that came to light quite some time after the original development. Many M9 project details on its various components fell into this category, which included op amp diagrams.

Nonetheless, Bell Labs did begin documenting some of the M9 work, even before the war ended. In the **Bell Laboratories Record** of December 1943, there was published a tribute to Harold Black, for his work on the feedback amplifier (see Reference 31). In the same and subsequent issues, there were published two stories on a public demonstration of the M9 system, as well as its development (see Reference 32).

Several key developments in electrical components were also documented in the **Bell Laboratories Record,** on capacitors, resistor networks, resistors, and precision potentiometers (see References 33-36).

There was also a fitting recognition of M9 designers Lovell, Parkinson and Kuhn within the **Bell Laboratories Record**, on the occasion of their Medal for Merit award in April of 1947 (see Reference 37). The importance of this work in the view of Bell labs is underscored by some of the distinguished names associated with the project. Contributors beyond those mentioned above also included Hendrick Bode, Claude Shannon, and other notables of the Bell Labs staff. Finally, there was a then-unrecognized importance. It established the utility of the (yet-to-be-named) op amp concept— op amps were born!

The M9 From A World View

Viewed historically, the work of Lovell, Parkinson and other Bell Labs designers assumes broad significance, since it was war-needs driven, and the outcome literally affected millions of lives. The work provided an analog control computer for a gun director system instrumental to the war effort, achieving high hit rates against incoming targets— up to 90% by some accounts. The work of the M9 system teamed with the SCR584 radar system was highly successful at its mission— indeed fortunate for world freedom.

Robert Buderi wrote a detailed narrative of WWII radar developments, and his book contains an interesting account of the M9's role (see Reference 38). A broad, single-source computing, control, and historical perspective is found in David Mindell's thesis, "**Datum for its Own Annihilation:" Feedback, Control and Computing, 1916-1945**, (see Reference 39). In Chapter 8, Mindell also has an account of the M9/SCR584 success.

Naming the Op Amp

Further wartime op amp development work was carried out in the labs of Columbia University of New York, and was documented in 1947 by the program's research head, Professor John Ragazzini (see Reference 40). This often-cited key paper is perhaps best known for coining the term *operational amplifier,* which of course we now shorten to the more simple *op amp*. Quoting from this paper on the naming:

> "*As an amplifier so connected can perform the mathematical operations of arithmetic and calculus on the voltages applied to its input, it is hereafter termed an 'operational amplifier'.*"

The Ragazzini paper outlines a variety of ways that op amps can be used, along with their defining mathematical relationships. This paper also references the Bell Labs work on what became the M9 gun director, specifically mentioning the op amp circuits used.

The work that gave rise to the above paper was a late WWII NDRC Division 7 contract with Columbia University. [1] At that time, Loebe Julie was a bright young research engineer in the Columbia University Labs. Julie did work on these early op amps, which were aimed at improvements to the M9 gun director system, stated contractually as "Fire Control Electronics".

Reportedly working against the wishes of Ragazzini, Julie was engaged to do this work at the behest of analog computer engineer George A. Philbrick, part of the Division 7 team (see References 41 and 42). Julie completed a two-tube op amp design, using a pair of 6SL7 dual triodes in a full differential-in/differential-out arrangement (see Reference 41, again). But, for whatever the reason, his lab boss Ragazzini gave Julie's amplifier work but a minor acknowledgment at the very end of the paper.

The op amp schematic shown in the Ragazzini paper (Fig. 1 of Reference 40) doesn't match the schematic attributed to Julie (Reference 41, again). And, Ragazzini doesn't cite any specifications for this circuit, so the origins and intent aren't clear, unless it was intended as a modest performance example. It doesn't seem as if it could be an M9 system candidate, for a couple of reasons.

For example, briefly analyzing the Fig. 1 Ragazzini op amp, it seems doubtful that this particular design was really intended to operate in the same environment as the original M9 op amp (Reference 30, again, or Fig. H-3 above). Swartzel's three-stage circuit used a triode and two pentodes, with one of the latter a power output stage. So, Ragazzini's circuit wouldn't appear to match the gain characteristics of Swartzel's design, as it used three cascaded triodes. It also wouldn't be capable of the same output drive, by virtue of its use of a 6SL7 output stage, loaded with 300kΩ.

---

[1] Mindell (reference 39, again) lists in his Table 6-1, a contract No.76 for "Fire Control Electronics," with Ragazzini as investigator, running from November 15, 1943 to September 30, 1945, at a cost of $85,000. The Division 7 supervisor for this Columbia University project is listed as SHC, for Samuel H. Caldwell.

Evolution of the Vacuum Tube Op Amp

Nevertheless, Julie's op amp design was notable in some regards. It had a better input stage— due to the use of a long-tailed 6SL7 dual triode pair, with balanced loads. This feature would inherently improve drift over previous single-ended triodes or pentodes.

As will be seen shortly, a truly key feature that Julie's circuit held over previous single-ended input designs was the basic fact that it offered *two signal inputs* (inverting and non-inverting) as opposed to the single inverting input (Fig. H-3, above). The active use of both op amp inputs allows much greater signal interface freedom. In fact, this feature is today a hallmark of what can be called a functionally complete op amp— nearly 60 years later! The differential input stage not only improved the drift performance, but it made the op amp immeasurably easier to apply. Ironically however, there was still some time before the application of op amps caught up with the availability of that second input.

Much other work was also done on the improvement of direct-coupled amplifiers during the war years and shortly afterwards. Stewart Miller, Edward Ginzton, and Maurice Artzt wrote papers on the improvement of direct-coupled amplifiers, addressing such concerns as input stage drift stabilization against heater voltage variations, inter-stage coupling and level shifting schemes, and control of supply impedance interactions (see References 43-45). Some additional examples of improved dc amplifiers can be found in the Valley-Wallman book (see Reference 46).

Before the 1940's expired, companies were already beginning to capitalize on op amp and analog computing technology. Seymour Frost wrote about an analog computer developed at Reeves Instrument Corporation, called REAC (see Reference 47). This computer used as its nucleus an op amp circuit similar to the Swartzel M9 design. In the Reeves circuit the first stage was changed to a 6SL7 dual triode, used in a Miller-compensated low drift setup (Reference 43, again).

Chopper Stabilization of the Vacuum Tube Op Amp

But, even with the use of balanced dual triode input stages, drift was still a continuing problem of early vacuum tube op amps. Many users sought means to hold the input referred offset to a sub-mV level, as opposed to the tens to hundreds of mV typically encountered. The drift had two components, warm-up related, and random or longer term, both of which necessitated frequent re-zeroing of amplifiers. This problem was at least partially solved in 1949, with Edwin A. Goldberg's invention of the *chopper-stabilized* op amp (see Reference 48).

The chopper-stabilized op amp employs a second, high gain, AC-coupled amplifier. It is arranged as a side-path to the main amplifier. The chopper channel is arranged with the input signal path AC-coupled to the inverting input of the main DC-coupled amplifier, and a 60 or 400Hz switch periodically commutating to ground. The switching action chops the small DC input signal to AC, which is amplified greatly (1000 or more). The AC output of the chopper path is synchronously rectified, filtered, and applied to the main

amplifier second input. In the resulting composite amplifier, main amplifier drift is reduced by a factor roughly equal to the chopper gain.

With chopper stabilization, op amps could have offset voltages stable to a few μV, and long terms drift sufficiently low that manual zeroing wasn't required. Another key benefit was that the DC and low frequency gain was also boosted, by an amount equal to the additional gain factor provided by the chopper channel. By this means, the DC open loop gain of a chopper amplifier could easily exceed 100,000 times (100 dB). Goldberg's amplifier of Ref. 48 for example, had a DC gain of 150,000,000, or 163dB.

As a consequence of the above, the DC gain-related precision of a chopper amplifier is much higher than that of a conventional op amp, due to the additional open loop gain. This basic point, combined with the "zero offset, zero drift" operating feature made chopper-stabilized vacuum tube op amps a standard choice for precision analog work. This point is one that, generally speaking, is also essentially true even today, with IC chopper op amps readily available. *Note— although today's chopper amplifiers operate by a different method, the net effect is still big improvements in DC offset, drift and gain.*

But, there were some serious downsides to these early chopper amplifiers. The basic chopper architecture described above essentially "uses up" the non-inverting second op amp input of a dual triode pair, to apply the DC-offset correction signal. Thus all of the early chopper op amps operated in an *inverting-only* mode. In time, improved chopper architectures were developed to overcome this limitation, and the very high DC precision was made available for all modes of use.

A second limitation was the fact that the first chopping devices used were mechanical switches (vibrators). As such, they were failure-prone, often before the tubes used alongside. In time all solid-state chopping devices were to be developed, but this didn't impact vacuum tube chopper amps.

Frank Bradley and Rawley McCoy of the Reeves Instrument Corporation discussed yet another variation on the M9 op amp design, in 1952 (see Reference 49). In the Bradley-McCoy circuit, a circuit similar to the M9 topology (but with a dual triode front end) is augmented by the addition of a chopper side path. The resulting amplifier had a DC gain of 30,000,00 (150dB), and very low drift and offset voltage.

By the mid to late fifties many companies began offering solutions to analog computing using chopper-stabilized op amps. However, this wasn't true right after the chopper amplifier became available in the early 1950's— it came about later on.

Shortly after 1950 Granino and Theresa Korn published the first of their textbooks on analog computing, **Electronic Analog Computers** (see Reference 50). This book, along with the 2nd Edition in 1956, became the early op amp user's standard reference work. The op amp example fifth chapter of the 1st edition shows a few chopper-stabilized examples, and Goldberg's work is mentioned. By the time the 2nd edition came out in 1956, chopper amplifiers dominated the examples.

Among the circuits presented in the Korn and Korn **Electronic Analog Computers** 1st edition was a later version of the Bell Labs designed op amp for the M9. A distinct evolutionary path can be noted in this schematic, shown in Figure H-4 below.

This version changes the input stage from a single pentode to a dual triode, with Miller-compensation added for improved stability (adjustable by the 2kΩ potentiometer). A close comparison finds that the Frost amplifier (Reference 47, again) is topologically almost identical with this M9 op amp version. And, vis-à-vis the original Swartzel design of Fig. H-3, further subtle changes to be noted are different AC compensation networks.

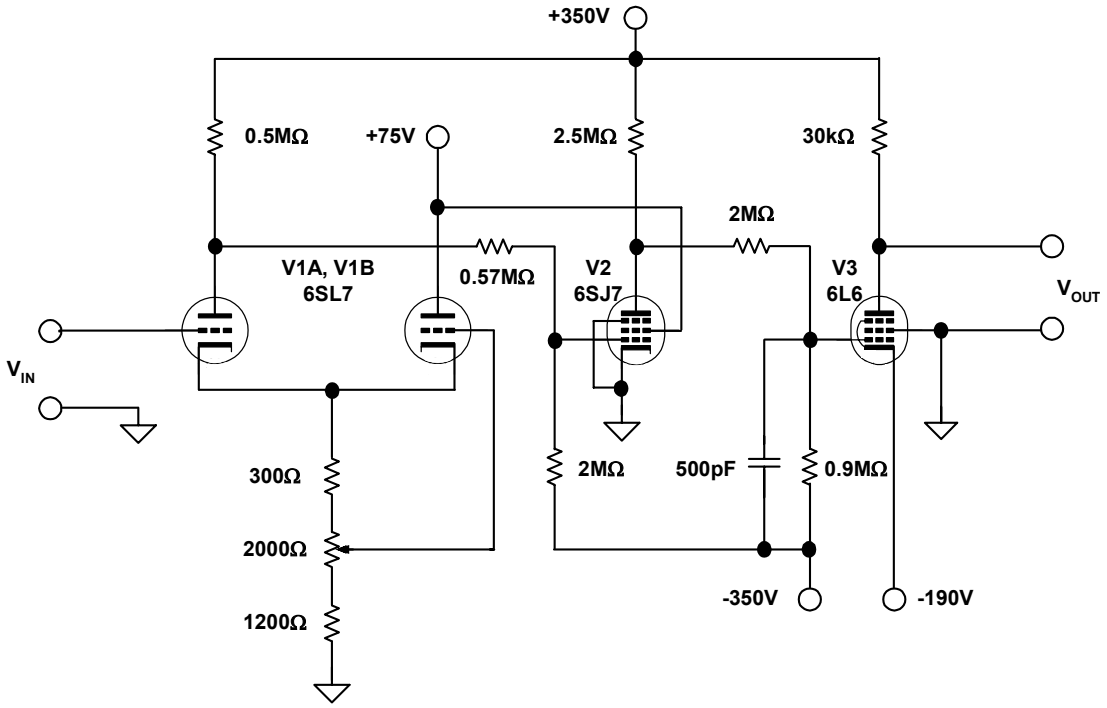

Figure H-4: *Schematic diagram of late M9 system op amp designed at Bell Telephone Laboratories*

Use of the Non-Inverting Op Amp Input

One aspect of things that did not change as yet was the use of the op amp signal input. All of the examples in the Korn and Korn book (Reference 50, again) use the op amp with the single-input, parallel feedback mode. In fact, although some of the op amp circuit examples shown in the book have balanced, dual triode inputs, engineering practice out in the world was still in the inverting-only mode. A glance at a topology such as Fig. H-4 reveals the difficulty with applying CM inputs— the amplifier simply was not designed to handle such signals. This was to change, but not very rapidly.

There are of course sound technical reasons why op amps didn't get much use in a non-inverting mode. Probably the biggest single reason would be the fact that it was much more difficult to make an op amp work over a high CM range (such as ±100V) which was then used with many circuits. This would require a major redesign of the front end, and most likely would have also eliminated the use of chopper stabilization.

Despite that, one early reference to the use of the op amp in a non-inverting signal manner was by Omar Patterson, in a patent filed in 1951 (see Reference 51). Although Patterson's patent is a broad array of analog computing circuits, they do utilize a common op amp structure, which is detailed as his Fig. 1.

In this design Patterson uses a fully-balanced dual triode front end, with the long-tailed pair's cathode current being established by a triode tube. With the balanced plate loading and regulated cathode current, the topology would have good CM response, and be capable of handling a fairly wide range of CM voltages. This op amp is reported to have a gain as high as 10,000 (80dB), so it was capable of reasonable accuracy.

Patterson goes on in the patent to outline a voltage follower gain stage using this op amp (his Fig. 10). In the extreme case of 100% feedback, the feedback stage's gain would be unity, with high input impedance. This is quoted for use of the circuit as an improved cathode follower. Quoting directly, "The advantages of this circuit lie in its extremely low output impedance, and its high degree of independence of tube characteristics."

George Philbrick and GAP/R

After WWII, George Philbrick also continued with op amp development work. Shortly thereafter he formed a company bearing his name, George A. Philbrick Researches, Inc., in 1946 (GAP/R). Philbrick's work was instrumental in the development of op amp technology in many regards. His company was to see growth over the span of the vacuum tube technology days and well into the solid-state era.

Not too long after forming GAP/R, Philbrick introduced the world’s first commercially available op amp, known as the K2-W. This modular 8-pin octal plug-in op amp was developed in 1952, and appeared in January 1953 (see Reference 52). A photo and schematic of this $20 op amp are shown in Figure H-5 (opposite).

The K2-W used two 12AX7 dual triodes, with one of the two tubes operated as a long-tailed pair input stage, which offered fully differential operation at the input. With the K2-W operating on ±300V supplies, the input stage's 220kΩ tail resistor was returned to the –300V supply, fulfilling the long-tailed pair biasing requirement.

Half of the remaining 12AX7 dual triode was operated as a second gain stage, which in turn drove the remaining section as a cathode follower output, through a level shifter part 8355037 (typically thyrite devices). Overall gain of the K2-W was enhanced by positive feedback through the 150kΩ resistor, connected back to the cathode of the second stage.

Operating from the ±300V power supplies @ 4.5mA, the K2-W was able to achieve a ±50V rated signal range at both input and output. DC gain was typically 15,000, and the entire circuit was packaged in a convenient, plug-in octal tube-based package.

Some vacuum tube op amp manufacturers provided chopper-stabilizer "add-on" units. In the case of GAP/R, this was the GAP/R K2-P. This unit, when used with the K2-W, formed a combination low drift, high gain op amp (see Reference 53).

Early on GAP/R set an excellent standard for application information, publishing a popular 1956 manual for the K2-W and related amplifiers which went through at least 10 printings by 1963 (Reference 53, again). GAP/R not only made available applications literature for their devices; they published a periodical devoted to analog computation, the **Lightning Empiricist**. It contained technical articles and new product information.

GAP/R also published what is now a classic set of reprints, the "Palimpsest" (see Reference 54). Some researchers see George A. Philbrick as a veritable op amp founding father. For example, Roedel, in his "An Introduction to Analog Computors" (Reference 54, again), gives Philbrick and Lovell credit for being the first op amp users.

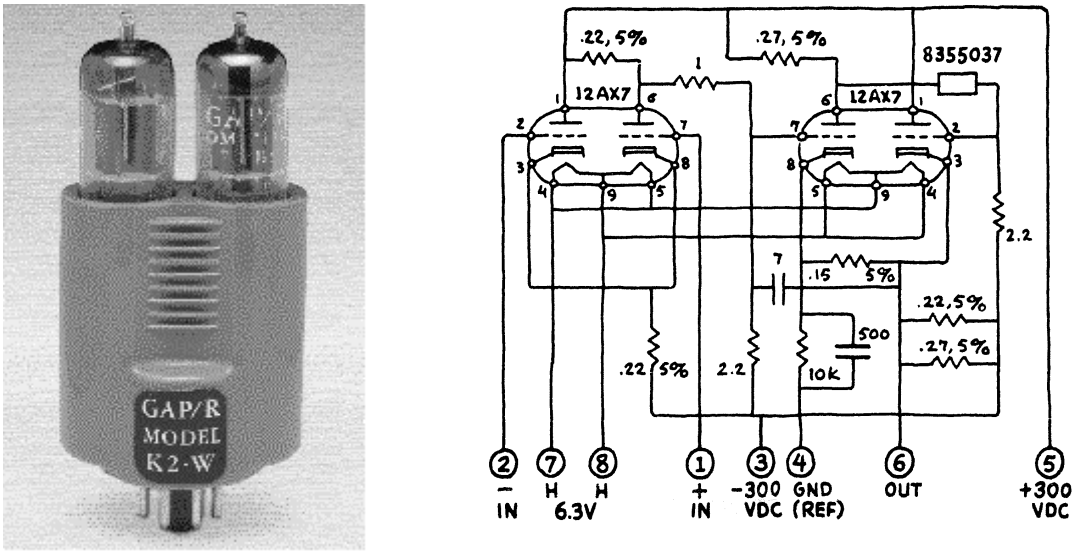

Figure H-5: *The GAP/R K2-W op amp, photo and schematic diagram (courtesy of GAP/R alumnus Dan Sheingold - schematic values in megohms and pF.)*

It is also undoubtedly true that the GAP/R organization produced some of the best documentation and application support for op amps, both vacuum tube and solid state.

Because of the longevity of so many op amp principles, much of the wisdom imparted in the GAP/R app notes is still as valid today as it was in the 1950's. Although it did not appear until several years later, the best example of this is GAP/R's classic 1965 op amp book edited by Dan Sheingold, **Applications Manual for Computing Amplifiers…** (see reference 55).

Armed with this book (and perhaps a copy of Korn and Korn's **Electronic Analog Computers**), the op amp user of the late 1960's was well prepared to face op amp circuit hardships. This was not just with analog computation tasks, but also the growing list of diverse applications into which op amps were finding new homes.

The Twilight Years of Vacuum Tube Op Amps

In the late 1950's and early 1960's, vacuum tube op amps had more or less reached their peak of technical sophistication, at least in terms of the circuitry within them. Packaging and size issues of course made a big impact on the overall appeal for the system designer, and there was work done in these areas.

An interesting design using three 9-pin miniature dual triodes is shown in Figure H-6 below. This compact design was done by Bela (Bel) Losmandy of Op Amp Labs (see Reference 56), then working with Micro-Gee Products, Inc. in 1956 (see Reference 57).

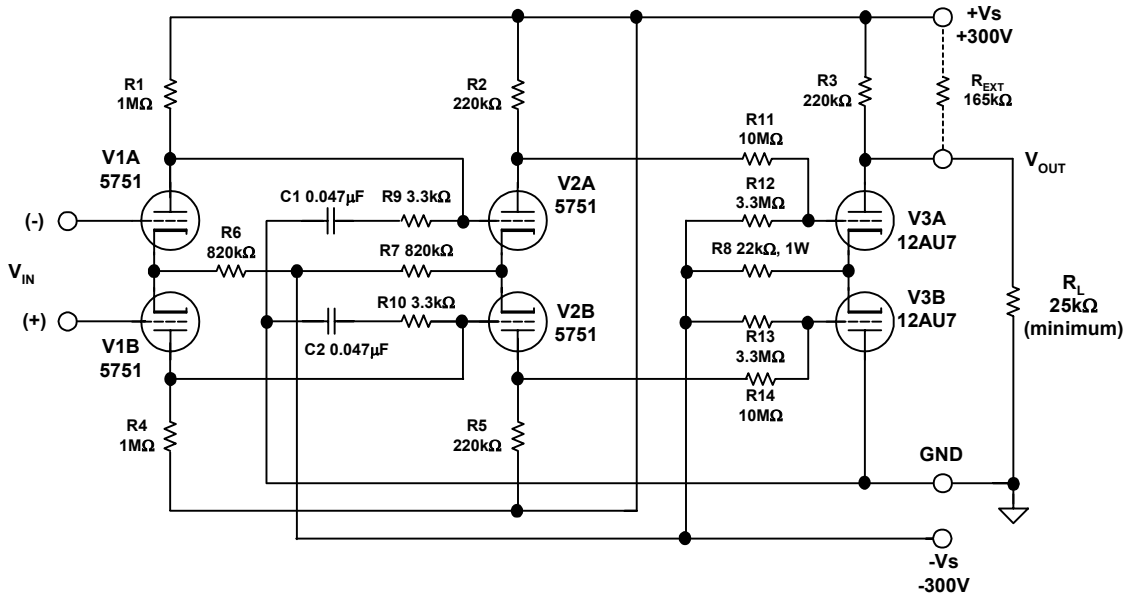

Figure H-6: *A fully differential op amp design by Bela Losmandy, for Micro-Gee Products, Inc.*

There are several interesting aspects of this circuit. First, it is entirely differential, right up to the 12AU7 output stage. This allows it to handle CM inputs with lower errors, and improves the drift characteristics. As can also be noted, there is only one (dual) level shift circuit, following the V1-V2 directly coupled differential stages. This minimizes gain loss, and improves the overall performance. The entire amplifier operates on supplies of ±300V @8mA, and has a gain of more than 10,000 operating into a 25kΩ load.

In the late 1950's and 1960's, two more publications appeared chronicling op amp developments. One was a long overview paper by Konigsberg, which appeared in 1959 (see Reference 59). The other was the analog and digital oriented computing handbook by Harry Husky and Granino Korn, **Computer Handbook**, in 1962 (see Reference 60). While this book was perhaps one of the last hurrahs for the vacuum tube op amp, it does contain a wealth of detailed design information on them.

By the time the 1960's rolled around, the solid-state era was already in progress. Vacuum tube op amps were on the wane, and smaller, low power, solid-state devices would soon take over op amp applications.

REFERENCES: VACUUM TUBE OP AMPS

(Note— appended annotations indicate relevance to op amp history.)

Development of Differential Amplifier Techniques

1. B. H. C. Matthews, "A Special Purpose Amplifier," **Proceedings of the Physiological Society**, Vol. 81, March 1934, pp. 28, 29. *(A dual-triode differential amplifier, with dual triode common-cathodes biased to ground through a high resistance, AC-coupled at the output).*

2. A. D. Blumlein, "Improvements in or Relating to Thermionic Valve Amplifying Circuit Arrangements," **UK Patent 482,740**, filed July 4, 1936, issued April 4, 1938. *(A basic common-cathode/resistance-biased-to-common, dual-triode differential amplifier, AC-coupled at input and output).*

3. Franklin Offner, "Push-Pull Resistance Coupled Amplifiers," **Review of Scientific Instruments**, Vol. 8, January, 1937, pp. 20, 21. (*AC-coupled, cascade differential amplifier circuits, including the use of the dual-triode common-cathodes biased to ground through a high resistance).*

4. O. H. Schmitt, "A Simple Differential Amplifier," **Review of Scientific Instruments**, Vol. 8, No. 4, April, 1937, pp. 126, 127. *(A basic common-cathode/cathode-to-common, dual-pentode differential amplifier, with plate-screen coupling, single-ended DC-coupling at the output).*

5. J. F. Toennies, "Differential Amplifier," **Review of Scientific Instruments**, Vol. 9, March, 1938, pp. 95-97. *(A differential amplifier circuit that uses a triode and pentode in a common-cathode configuration, biased to a negative voltage through a high resistance).*

6. O. H. Schmitt, "Cathode Phase Inversion," **Journal of Scientific Instruments**, Vol. 15, No. 3, 1938, pp. 100, 101. *(A circuit is presented as a single-input phase inverter, but is also a true DC-coupled, differential-input/differential-output amplifier topology. The dual triodes have their common cathodes biased to a negative voltage through a high resistance).*

7. Lionel Jofeh, "Improvements in Electric Circuits Comprising Electronic Discharge devices," **UK Patent 529,044**, filed May 9, 1939, issued Nov. 13, 1940. *(A catalog of the various forms of dual triode, dual pentode differential amplifier circuits, with variations in methods of cathode coupling).*

8. Harold Goldberg, "A High-Gain DC Amplifier for Bio-Electric Recording," **Transactions AIEE**, Vol. 59, January 1940, pp. 60-64. *(A completely differential, multi-stage, direct-coupled, high gain amplifier for biomedical work. Illustrates the use of common-cathode bias resistance for reducing sensitivity to in-phase inputs).*

9. O. H. Schmitt, "Cathode Phase Inversion," **Review of Scientific Instruments**, Vol. 12, No. 11, November 1941, pp. 548. *(An expansion of previous work of the same name; includes a true DC-coupled, differential-input/differential-output amplifier topology, with the dual-triode common-cathodes biased to a negative voltage through a high resistance).*

10. Walther Richter, "Cathode Follower Circuits," **Electronics**, November 1943, pp. 112-117, 312. *(Analysis of various cathode follower circuits, including the long-tailed differential pair).*

11. Harold Goldberg, "Bioelectric-Research Apparatus," **Proceedings of IRE**, Vol. 32, June 1944, pp. 330-336. *(Another differential, multi-stage, direct-coupled, high gain amplifier for biomedical work. Illustrates the use of pentode bias resistance for long-tailed pair; uses battery operated front end).*

12. G. Robert Mezger, "A Stable Direct-Coupled Amplifier," **Electronics**, July, 1944, pp. 106-110, 352, 353. *(A stable, high gain, differential-input/differential-output, direct-coupled amplifier. Uses novel active device inter-stage coupling technique).*

13. Franklin Offner, "Balanced Amplifiers," **Proceedings of IRE**, Vol. 33, March 1945, pp. 202. *(A criticism of other differential amplifier circuit papers).*

14. D. H. Parnum, "Biological Amplifiers, Parts 1 and 2," **Wireless World**, Nov. 1945, pp. 337-340, and Dec. 1945, pp. 373-376. *(A survey of various differential amplifier techniques, with a multi-stage AC-coupled design example*).

15. Denis L. Johnston, "Electro-Encephalograph Amplifier, Parts 1-3," **Wireless Engineer**, August 1947, pp. 231-242, Sept. 1947, pp. 271-277, and October 1947, pp. 292-297. *(A comprehensive overview of various biological differential amplifier techniques with many example circuits, both DC and AC-coupled. Includes 61 references*).

16. D. H. Parnum, "Transmission Factor of Differential Amplifiers," **Wireless Engineer**, April 1950, pp. 125-129. *(An analysis of the common-mode and differential signal response of differential amplifiers*).

17. P. O. Bishop, E. J. Harris, "A DC Amplifier for Biological Application," **Review of Scientific Instruments**, Vol. 21, No. 4, April 1950, pp. 366-377. *(A very sophisticated differential amplifier system, employing common-mode feedback, active differential pair current sources, input shield bootstrapping, power supply stabilization, etc. Many references cited.)*

18. Richard McFee, "Improving Differential Amplifier Rejection Ratio," **Review of Scientific Instruments**, Vol. 21, No. 8, August 1950, pp. 770-771. *(A feedback modification to a standard dual triode differential stage to improve common-mode rejection).*

19. Harry Grundfest, "Biological Requirements for the Design of Amplifiers," **Proceedings of the IRE**, Vol. 38, September 1950, pp. 1018-1028. *(An overview of amplifier requirements for biological measurements; includes commentary on the history of differential amplifier development).*

20. C. M. Verhagen, "A Survey of the Limits in D.C. Amplification," **Proceedings of the IRE,** Vol. 41, May 1953, pp. 615-630. *(A technical discussion of both tube and circuit parameters which impact DC stability).*

Op Amp and Analog Computing Developments

21. George A. Philbrick, "Designing Industrial Controllers by Analog," **Electronics**, June 1948. *(Fig. 3b example of an early analog computation circuit).*

22. Per A. Holst, "George A. Philbrick and Polyphemus—— The First Electronic Training Simulator," **IEEE Annals of the History of Computing**, Vol. 4, No. 2, April 1982, pp. 143-156. *(George A. Philbrick's analog computing circuitry at Foxboro, late 1930's).*

23. H. C. Higgins, et al, "Defense Research at Bell Laboratories: Electrical Computers for Fire Control," **IEEE Annals of the History of Computing**, Vol. 4, No. 3, July, 1982, pp. 218-236. See also: M. D. Fagen, Ed. **A History of Engineering and Science in the Bell System**, Vol. 2, "National Service in War and Peace, 1925-1975," Bell Telephone Laboratories, 1978, ISBN 0-0932764-001-2. *(A summary of various Bell Labs fire control analog computer developments, including op amps and feedback components. Note— the IEEE article is reprinted from the broader, more detailed Bell Telephone Laboratories volume).*

24. James S. Small, "General-Purpose Electronic Analog Computing: 1945-1965," **IEEE Annals of the History of Computing**, Vol. 15, No. 2, 1993, pp. 8-18. *(An overview of analog computing, includes discussion of early operational amplifiers).*

25. David A. Mindell, "Automation's Finest Hour: Bell Labs and Automatic Control in World War II," **IEEE Control Systems**, December 1995, pp. 72-80. *(Narrative of the T10 computer system and the M9 gun director developments at Bell Labs).*

26. C. A. Lovell, et al, "Artillery Predictor," **US Patent 2,404,081**, filed May 1, 1941, issued September 24, 1946. *(The mathematics of analog computer system using op amps for functions of repeating, inverting and summing amplifiers, plus differentiation).*

27. C. A. Lovell, et al, "Electrical Computing System," **US Patent 2,404,387**, filed May 1, 1941, issued July 23, 1946. *(An analog computer system using op amps for control).*

28. C. A. Lovell, "Continuous Electrical Computation," **Bell Laboratories Record**, 25, March, 1947, pp. 114-118. *(An overview of various fire-control analog computational circuits of the T10 and M9 systems, many illustrating uses of op amps).*

29. W. H. Boghosian, et al, "Artillery Director," **US Patent 2,493,183**, filed May 21, 1942, issued Jan. 3, 1950. *(An artillery fire control system using op amps for control).*

30. K. D. Swartzel, Jr., "Summing Amplifier," **US Patent 2,401,779**, filed May 1, 1941, issued July 11, 1946. *(The first operational amplifier, used as a summing amplifier).*

31. Recognition of Harold Black, "Historic Firsts: The Negative Feedback Amplifier," **Bell Laboratories Record**, Vol. 22, No.4, December, 1943, pp. 173. *(A Bell Laboratories tribute to the Black negative feedback amplifier invention).*

32. "Electrical Gun Director Demonstrated," **Bell Laboratories Record**, Vol. 22, No. 4, December 1943, pages 157-167. See also: "Development of the Electrical Director," **Bell Laboratories Record**, Vol. 22, No. 5, January 1944, pages 225-230. *(Bell Laboratories narratives of the M9 gun director system demonstration and development).*

33. J. R. Weeks, "Polystyrene Capacitors," **Bell Laboratories Record**, 24, March, 1946, pp. 111-115. *(Development of a new capacitor film dielectric for electronic analog computer networks).*

34. E. C. Hageman, "Precision Resistance Networks for Computer Circuits," **Bell Laboratories Record**, 24, December, 1946, pp. 445-449. *(Development of precision resistor networks for electronic analog computers).*

35. C. Pfister, "Precision Carbon Resistor ," **Bell Laboratories Record**, 26, October, 1946, pp. 401-406. *(Development of deposited carbon resistors for electronic analog computers).*

36. D. G. Blattner, "Precision Potentiometers for Analog Computers," **Bell Laboratories Record**, 32, May, 1954, pp. 171-177. *(Development of precision wire wound potentiometers for use in electronic analog computers).*

37. Recognition of M9 Designers C. A. Lovell, D. B. Parkinson, and J. J. Kuhn, "Medals for Merit," **Bell Laboratories Record**, Vol. 27, May, 1947, pp. 208. *(The Medal for Merit awarded to the M9 designers on April 8, 1947 is the nation's highest civilian award).*

38. Robert Buderi, **The Invention That Changed the World**, Simon and Schuster, 1996, ISBN: 0-684-81021-2. *(A marvelous account of radar development during WWII, centered largely on the MIT Radiation Lab team— includes a narrative on the integration of the M9 fire control system with the SCR-584 radar, and the system's operational success).*

39. David A. Mindell, **"Datum for its Own Annihilation:" Feedback, Control and Computing 1916-1945**, PhD thesis, MIT, May 2, 1996. *(Historical survey of computing control systems. Chapter 8 of this work is 'Radar and System Integration', which covers the Bell Labs work on the T10 and M9 gun director projects)*

Naming the Op Amp

40. John R. Ragazzini, Robert H. Randall and Frederick A. Russell, "Analysis of Problems in Dynamics by Electronic Circuits," **Proceedings of the IRE**, vol. 35, May 1947, pp. 444-452. *(An overview of operational amplifier uses, and 1st formal definition of the term).*

41. George Rostky, "Unsung Hero Pioneered Op Amp," **EE Times**, March 24, 1997, or, http://www.eetonline.com/anniversary/designclassics/opamp.html *(A narrative on the op amp work of Loebe Julie at Columbia University during WWII [and footnoted in the Ragazzini paper]. A schematic diagram of the Julie op amp is included).*

42. Bob Pease, "What's All This Julie Stuff, Anyhow?," **Electronic Design**, May 3, 1999, or, http://www.elecdesign.com/1999/may0399/pease/0503bp.shtml *(Another narrative on the op amp work of Loebe Julie at Columbia University during WWII [and footnoted in the Ragazzini paper]).*

Evolution of the Vacuum Tube Op Amp

43. Stewart E. Miller, "Sensitive DC Amplifier with AC Operation," **Electronics**, November, 1941, pp. 27-31, 106-109. *(Design example of a stable, high-gain direct-coupled amplifier including 'cathode-compensation' against variations in filament voltage, use of glow tube inter-stage coupling, and a stable line-operated DC supply).*

44. Edward L. Ginzton, "DC Amplifier Design Techniques," **Electronics**, March 1944, pp. 98-102 *(Various design means for improving direct-coupled amplifiers).*

45. Maurice Artzt, "Survey of DC Amplifiers," **Electronics**, August, 1945, pp. 112-118. *(Survey of direct-coupled amplifier designs, both single-ended and differential, with emphasis on high stability).*

46. George E. Valley, Jr., Henry Wallman, **Vacuum Tube Amplifiers**, MIT Radiation Labs Series No. 18, McGraw-Hill, 1948. *(A classic WWII Radiation Lab development team textbook. Chapter 11, by John W. Gray, deals with direct-coupled amplifiers).*

47. Seymour Frost, "Compact Analog Computer," **Electronics**, July, 1948, pp. 116-120, 122. *(A description of the Reeves Electronic Analog Computer [REAC], which used as the computing amplifier a circuit similar to the M9 op amp. Uses a Miller-compensated triode input stage).*

48. E. A. Goldberg, "Stabilization of Wide-Band Direct-Current Amplifiers for Zero and Gain," **RCA Review**, June 1950, pp. 296-300. See also: "Stabilized Direct Current Amplifier, **US Patent 2,684,999**, filed April 28, 1949, issued July 27, 1954. *(A system for lowering vacuum tube op amp offset voltage, drift, and gain errors, by means of an AC-coupled parallel-path, with synchronous rectification, and DC signal reinsertion— in short, the* chopper-stabilized *op amp).*

49. Frank R. Bradley, Rawley McCoy, "Driftless DC Amplifier," **Electronics**, April 1952, pp. 144-148. *(A description of the Reeves A-105 Analog Computer, which used as the computing amplifier a circuit partially similar to the M9 op amp. Adds chopper stabilization for low drift).*

50. Granino Korn and Theresa Korn, **Electronic Analog Computers,** McGraw-Hill, 1952. *(A classic early work on the uses and methodology of analog computing. In Chapter 5, an op amp circuit attributed to Bell Labs and the M9 project is described, along with many other examples, and design details).*

51. Omar L. Patterson, "Computing Circuits," **US Patent 2,855,145**, filed July 30, 1951, issued Oct. 7, 1958. *(A catalog of analog computation circuits based on a fully differential input op amp circuit, including use of a voltage follower configuration).*

52. **Data Sheet For Model K2-W Operational Amplifier**, George A. Philbrick Researches, Inc., Boston, MA, January 1953. See also "40 Years Ago," **Electronic Design**, December 16, 1995, pp. 8. *(The George A. Philbrick Research dual triode K2-W, the first commercial vacuum tube op amp).*

53. Henry Paynter, Ed., **Applications Manual for PHILBRICK OCTAL PLUG-IN Computing Amplifiers**, George A. Philbrick Researches, Inc., Boston, MA, 1956. *(The first op amp application manual).*

54. Jerry Roedel, "An Introduction to Analog Computors," within **A Palimpsest on the Electronic Analog Art**, George A. Philbrick Researches, Inc., Boston, MA, 1955. *(Roedel's paper is one of many analog computing papers, [including Ragazzini et al, above]).*

55. Dan Sheingold, Ed., **Applications Manual for Operational Amplifiers for Modeling, Measuring, Manipulating, and Much Else**, George A. Philbrick Researches, Inc., Boston, MA, 1965. *(The classic GAP/R op amp application manual, now a collector's item).*

56. **Opamp Labs Inc.,** 1033 N Sycamore Avenue, Los Angeles, CA, 90038 (323) 934-3566 http://www.opamplabs.com/bel.htm

57. Bela Losmandy, **Three Stage Micro-Gee Products, Inc**.**Op Amp**, 1956.

58. Granino Korn and Theresa Korn, **Electronic Analog Computers, 2nd Ed.** McGraw-Hill, 1956. *(Second edition of the classic work on the uses and methodology of analog computing. Chapter 5 features an increased number of op amp circuits, many chopper-stabilized).*

59. R. L. Konigsberg, "Operational Amplifiers," **Advances in Electronics and Electron Physics**, Vol. 11, 1959, pp. 225-285. *(An overview of vacuum tube and [some] solid state op amps, with 75 references).*

60. Harry Husky, Granino Korn, **Computer Handbook**, McGraw-Hill, 1962. *(An encyclopedic reference work on analog computing. Includes detailed op amp design section by Edward Billinghurst, plus a comprehensive list of op amp circuit examples, with specifications).*

ACKNOWLEDGEMENTS:

Many comments were received during the preparation of this section, and all are very much appreciated.

Particularly useful were numerous references on differential amplifiers, received from vacuum tube historian Gary Longrie. Gary also reviewed the manuscript and made numerous improvement comments. Without his enthusiastic inputs, the vacuum tube related sections of this narrative would be less complete.

Dan Sheingold supplied reference material, reviewed the manuscript, and made numerous constructive comments. Without his inputs, the vacuum tube op amp story would have less meaning.

Bel Losmandy provided many helpful manuscript inputs, including his example 1956 vacuum tube op amp design. He also reviewed the manuscript and made many helpful comments.

Paul De Raymond Leclercq and Morgan Jones supplied the reference to Blumlein's patent describing his use of a differential pair amplifier.

Bob Milne reviewed the manuscript and offered various improvement comments

Steve Bench provided helpful comment on several points related to the manuscript.

NOTES:

SECTION 3: SOLID-STATE MODULAR AND HYBRID OP AMPS

Vacuum tube op amps continued to flourish for some time into the 1950's and 1960's, but their competition was eventually to arrive from solid-state developments. These took the form of several key innovations, all of which required a presence before effective solid-state op amp designs could be established. This discussion treats *modular and hybrid* solid-state op amps, which preceded and overlapped solid-state IC op amps.

There were three of these key developments, the invention of *the transistor*, the invention of *the integrated circuit* (IC), and the invention of *the planar IC process*. A detailed history of solid-state inventions and related process developments can be found in articles celebrating the transistor's 50th anniversary, within the Autumn 1997 **Bell Labs Technical Journal** (see References 1 and 2).

Birth of the Transistor

John Bardeen, Walter Brattain, and William Shockley of Bell Labs, working with *germanium* semiconductor materials, first discovered the transistor effect in December of 1947. Of course, this first step was a demonstration of gain via a new principle, using a semi-conducting material, as opposed to a vacuum tube. But more remained to be done before commercial transistors were to appear. For their achievement, the trio received the 1956 Nobel Prize in physics. In addition to vacuum tubes, circuit designers now had a lower voltage, lower power, miniature amplifying device (see References 3 and 4).

Over the course of the next 10 years or more, various means were explored to improve the germanium transistors. The best germanium transistors were still relatively limited in terms of leakage currents, general stability, maximum junction temperature, and frequency response. Some of these problems were never to be solved. While many performance improvements were made, it was early recognized that *silicon* as a semiconductor material had greater potential, so this occupied many researchers.

In May of 1954, Gordon Teal of Texas Instruments developed a grown-junction *silicon* transistor. These transistors could operate to 150°C, far higher than germanium. They also had lower leakage, and were generally superior amplifying devices. Additional processing refinements were to improve upon the early silicon transistors, and eventually lead a path to the invention of the first integrated circuits in the late fifties.

Birth of the IC

In 1958, Jack Kilby of Texas Instruments invented the *integrated circuit*, now known universally as the IC (see Reference 5). For this effort he was ultimately to become a co-recipient of the 2000 Nobel Prize in physics.

Kilby's work, however important as it was, could arguably be said to be non-exclusive in terms of first authorship of the integrated circuit. In early 1959, Robert Noyce, an engineer at Fairchild Semiconductor, also developed an IC concept (see Reference 6).

The nucleus of Noyce's concept was actually closer to the concept of today's ICs, as it used inter-connecting metal trace layers between transistors and resistors. Kilby's IC, by contrast, used bond wires.

As might be expected from such differences between two key inventions, so closely timed in their origination, there was no instant consensus on the true "IC inventor". Subsequent patent fights between the two inventor's companies persisted into the 1960s. Today, both men are recognized as IC inventors.

The Planar Process

In general parallel with the Noyce's early IC developments, Jean Hoerni (also of Fairchild Semiconductor) had been working on means to protect and stabilize silicon diode and transistor characteristics. Until that time, the junctions of all *mesa* process devices were essentially left exposed. This was a serious limitation of the mesa process.

The mesa process is so-named because the areas surrounding the central base-emitter regions are etched away, thus leaving this area exposed on a plateau, or mesa. In practice, this factor makes a semiconductor so constructed susceptible to contaminants, and as a result, inherently less stable. This was the fatal flaw that Hoerni's invention addressed.

Hoerni's solution to the problem was to re-arrange the transistor geometry into a flat, or *planar* surface, thus giving the new process its name (see References 7 and 8). However, the important distinction in terms of device protection is that within the planar process the otherwise exposed regions are left covered with silicon dioxide. This feature reduced the device sensitivity to contaminants; making a much better, more stable transistor or IC.

With the arrangement of the device terminals on a planar surface, Hoerni's invention was also directly amenable to the flat metal conducting traces that were intrinsic to Noyce's IC invention. Furthermore, the planar process required no additional process steps in its implementation, so it made the higher performance economical as well. As time has now shown, the development of the planar process was another key semiconductor invention. It is now widely used in production of transistors and ICs.

At a time in the early 1960s shortly after the invention of the planar process, the three key developments had been made. They were the (silicon) transistor itself, the IC, and the planar process. The stage was now set for important solid-state developments in op amps. This was to take place in three stages. First, there would be *discrete transistor* and *modular* op amp versions, second there would be *hybrid op amps*, which could be produced in a couple of ways. One hybrid method utilized discrete transistors in chip form(s), interconnected to form an op amp; another was a specially matched transistor pair combined with an IC op amp for improved performance, and thirdly, the op amp finally became a complete, integral, dedicated IC— the *IC op amp*. This latter developmental stage is covered more fully within the next section of this chapter.

Of course, within these developmental stages there were considerable improvements made to device performance. And, as with the vacuum tube/solid-state periods, each stage overlapped the previous and/or the next one to a great extent.

Solid-State Modular and Hybrid Op Amp Designs

There were new as well as old companies involved in early solid-state op amps. GAP/R was already well established as a vacuum tube op amp supplier, so solid-state op amps for them were a new form of the same basic product. With GAP/R and others in the 1960's, the Boston area was to become the first center of the solid-state op amp world.

Elsewhere, other companies were formed to meet market demand for the more compact transistor op amps. Burr-Brown Research Corporation in Arizona fell into this category. Formed by Robert Page Burr and Thomas Brown in 1956, Burr-Brown was an early modular op amp supplier, and supported their products with an applications book (see Reference 9). The Burr-Brown product line grew steadily over the years, emerging into a major supplier of precision amplifiers and other instrumentation ICs. Texas Instruments bought Burr-Brown in 2000, merging the product lines of the two companies.

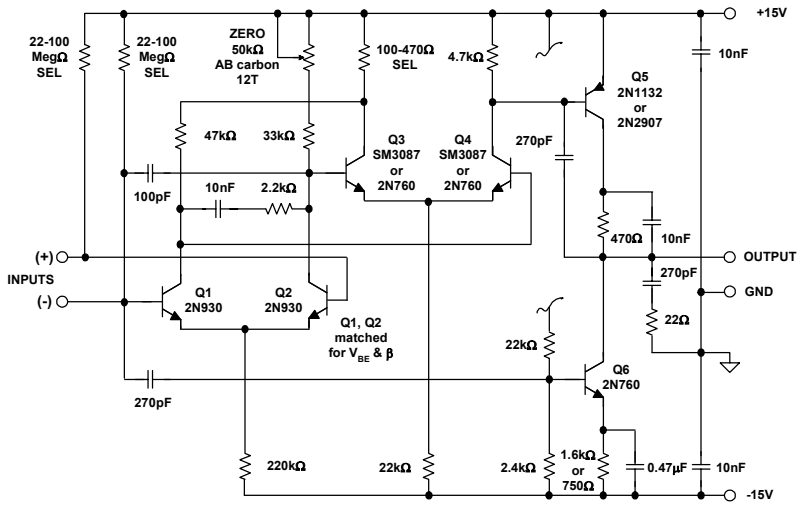

Figure H-7: *The GAP/R model P65 solid-state op amp*

On the other hand, in 1960 GAP/R was a transitioning company, and while they maintained the vacuum tube op amp line for some time, they stayed away from solid-state op amps until quality silicon transistors could be found. GAP/R began to introduce solid-state op amps in the early 1960's. George Philbrick was simply unwilling to produce germanium transistor solid-state op amps, and he also had specific ideas about the optimum amplifier topology that could be used— more on this below.

The new solid-state op amps were to transition power supply and signal range standards from ±300V/±100V down to ±15V/±10V, a standard that still exists today. And of course, new packaging for the op amps was to emerge, in several forms.

The GAP/R P65, shown above in Figure H-7, was a general purpose device. It was designed by Alan Pearlman, with later revisions by Bob Malter, and was produced from 1961 through 1971. The first stage Q1-Q2 used a pair of matched 2N930s, with a tail current of 66µA, and had hand-selected bias compensation (the SEL resistors).

The second P65 stage of Q3-Q4 ran at substantially more current, and featured a gain-boosting positive feedback loop via the SEL and 47kΩ resistors. The common-emitter output stage was PNP Q5, loaded by NPN current source Q6. The two-stage NPN differential pair cascade used in the P65 design was to become a basic part of other GAP/R op amps, such as the P45 (described below).

Small value feedforward capacitors sped up the AC response, and an output RC snubber provided stability, along with phase compensation across the Q1-Q2 collectors. The transistor types shown represented the original P65, but later on the P65A used better transistors (such as the 2N2907), and thus could deliver more output drive.

Another GAP/R solid-state op amp was the P45, shown below in Figure H-8 as a photo of the card-mounted op amp, and the schematic. The P45 was designed by Bob Pease, and was introduced in 1963 (see Reference 10). The edge connector card package shown was used with the P45 and P65, as well as many other GAP/R solid-state amplifiers.

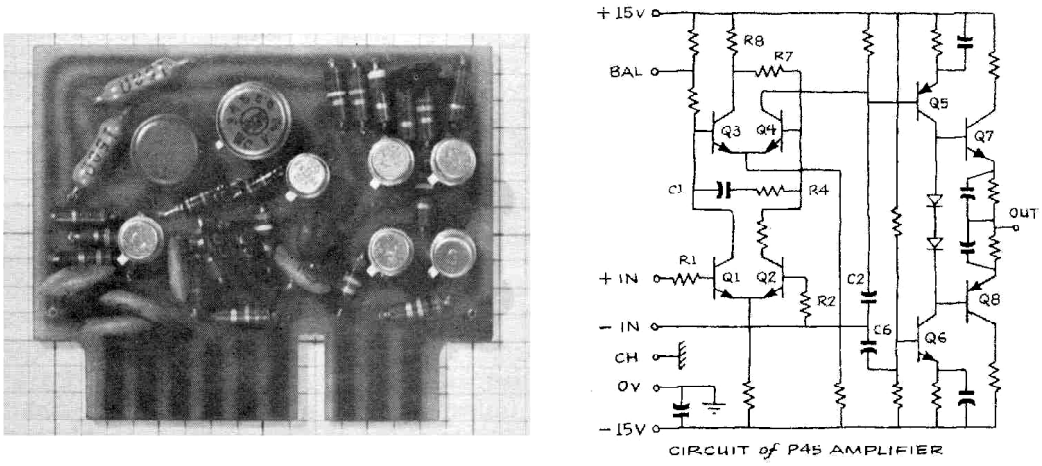

Figure H-8: *The GAP/R model P45 solid-state op amp*

The P45 design was aimed at fast, inverting mode applications. With a class AB output stage, the P45A could deliver ±10V at ±20mA to the load. Gain was rated a minimum of 50,000 at 25°C into a load of 500Ω. One of the more outstanding specifications of the P45 was its gain-bandwidth product of 100MHz. In 1966, a P45A cost $118 in quantities of 1-4 (see Reference 11). Both the P65 and P45 ran on ±15V, the new power standard, and were intended for input/output signal ranges of ±10V.

As mentioned, the cascaded NPN differential pair topology used in the P45 and P65 designs was to become a basic part of other GAP/R op amps. A feature of the design was the controlled positive feedback path, from the Q3 collector back to the Q4 base. Offset was controlled by a potentiometer connected between the BAL pin and +15V in the P45, with a similar arrangement used in the P65 (Fig. H-7, again).

In the P45 the first two gain stages are followed by PNP common-emitter stage Q5, which provides a great deal of the voltage gain. Emitter followers Q7 and Q8 buffer the high impedance node at Q5's collector, providing a low impedance source to the load.

In 1962 Alan Pearlman and partner Roger R. (Tim) Noble formed their own Boston area company, Nexus Research Laboratory, Inc. Nexus competed with both GAP/R and Burr-Brown in the growing solid-state op amp field (and ultimately with a third local company). The Nexus mission was to deliver solid-state op amps to customers for printed circuit board mounting, thus the Nexus designs used a rectangular, potted module package. They were so popular that they influenced GAP/R to follow suit with modular designs of their own.

In 1962, George Philbrick himself did the layout of another P65 derivative, the PP65, which was one of the first GAP/R modules. Shown in Figure H-9 below, this square outline, 0.2" centered, 7-pin footprint was to become more or less a modular op amp standard. It used five pins for output/power/offset on one side, with the two input pins on the opposite side.

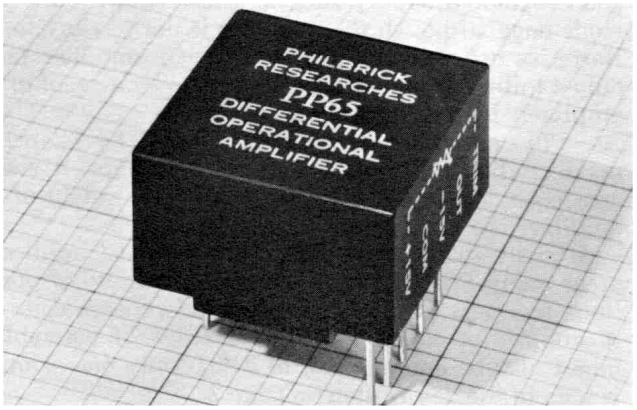

Figure H-9: *The GAP/R model PP65 potted module solid-state op amp*

It might be easy for some to dismiss the importance of a package design within a chart of op amp progress. Nevertheless, the modular package format opened up new opportunities, and allowed the op amp to be treated, for the first time, *as a component*. This opening of application opportunities enhanced op amp growth, significantly.[1]

Varactor Bridge Op Amps

George Philbrick championed a novel op amp type that became a GAP/R profit maker— the *varactor bridge* amplifier. In this circuit, voltage variable capacitors (varactors) are used in an input stage that processes the op amp error voltage as a phase-sensitive AC carrier. By careful bridge component arrangement, the op amp input terminals are forced to see only tiny DC leakage currents, i.e., as small as 1pA (or in some cases, much less).

As a result, a varactor bridge op amp achieved the lowest input current of any op amp available in the solid-state period. Lower than common tubes, in fact! In addition, since there was no input DC path to common, the allowable input CM voltage of a varactor bridge op amp could go very high— to levels as high as ±200V.

[1] This pattern was to be repeated again and again with op amps, and continues even today, with miniature SOIC packages displacing DIP and other through-hole packages.

Figure H-10 below illustrates in block diagram form a varactor bridge op amp. There are four main components, the front end composed of the bridge circuit and a high frequency oscillator, an AC amplifier to gain-up the bridge output error voltage, a synchronous phase detector to convert the amplified AC error to a corresponding DC error, and finally an output amplifier, providing additional DC gain and load drive.

The circuit worked as follows: A small DC error voltage V_{IN} applied to the matched varactor diodes D1 and D2 causes an AC bridge imbalance, which is fed into the AC amplifier. This AC voltage will be phase sensitive, dependent upon the DC error. The remaining parts of the loop amplify and detect the DC error.

To apply the amplifier, an external feedback loop is closed from V_{OUT} back to the inverting input terminal, just as with conventional op amps. The difference in the case of the varactor bridge op amp lies in the fact that two unusual degrees of freedom existed, in terms of both bias current and CM voltage.

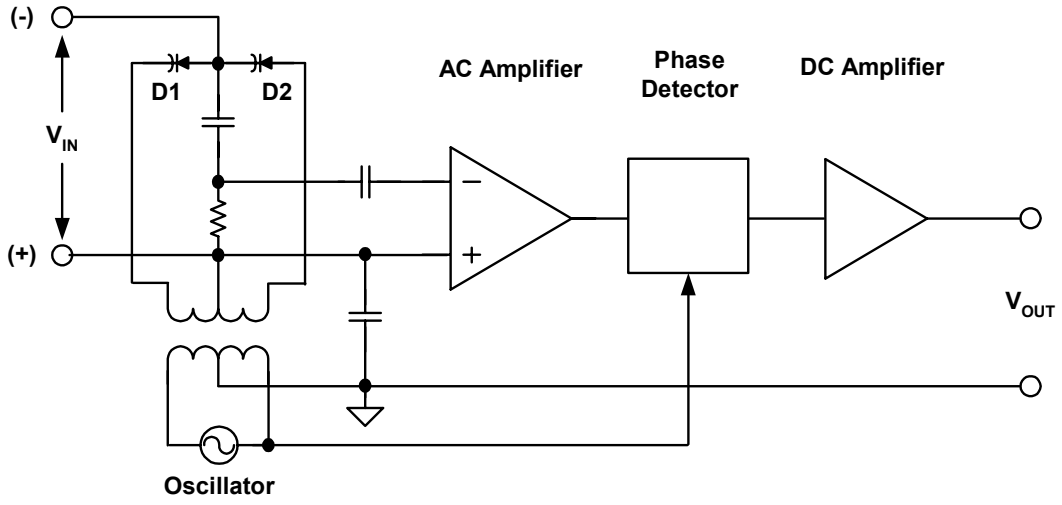

Figure H-10: *Generalized block diagram for a varactor bridge solid-state op amp*

The GAP/R varactor bridge op amp model was called the P2. It was a premium part in terms of the DC specifications, but not speed. In fact, the unity-gain frequency was just 75kHz, but the specification that people keyed on was the ±10pA input offset current. Also, the CM range of ±200V very likely enabled a few applications that previously might have required the use of a tube amplifier to address.

In 1966, an SP2A sold for a then astronomical price of $227 (see Reference 11, again). Bob Pease wrote a fascinating narrative on the P2's collaborative development at GAP/R, which was by engineers George Philbrick and Bob Malter (see Reference 12). George Philbrick was also issued a patent on a varactor bridge amplifier, in 1968 (see Reference 13). In 1966 GAP/R and Nexus Research Laboratories were purchased by Teledyne Corporation, and the merged product line continued into hybrids and ICs.

But, there was later on to be a sad note in this GAP/R history. GAP/R founder and master innovator George Philbrick passed away in late 1974, at a relatively young age of 61. A tribute to George Philbrick was offered by his partner and collaborator, Professor Henry Paynter of MIT (see Reference 14).

The Birth of ADI

The emergence of a third Boston area op amp company took place in the mid 1960's. In January of 1965 Analog Devices Inc. (ADI) was founded by Matt Lorber and Ray Stata. Operating initially from Cambridge, MA, op amps were the first product of the new company. Many of the early op amps were modular designs (more on this below).

Dan Sheingold has suggested that the ADI founders may have intentionally left out the word "Research" as part of the ADI name (see Reference 15). This would be to differentiate the new company from all of the (then) three competitors, Burr-Brown, GAP/R, and Nexus Research Laboratories, and thus broaden market appeal for op amps.

And, it seemed to work for the new ADI venture, with sales taking off quite soon. One of the first "products" of the new ADI was application support for op amps (also noted by Sheingold, Reference 15, again). In the first year, Ray Stata authored a comprehensive guide to op amps (see Reference 16). Examples of this application support were to continue through the early years and afterwards, echoing a successful business practice established by GAP/R.

The first few ADI years resulted in many new op amps, in mostly the modular package style, using both bipolar transistor and FET technologies. A complete list is much more broad than can be covered here, so just some highlights will be sampled.

Model 3xx Series Varactor Bridge Op Amps

To compete with GAP/R and their P2, ADI marketed a number of varactor bridge input op amps. The first varactor bridge op amps were the 301, 302, and 303 models, which were all similar, but differed in detail as to the input mode. They were differential (301), inverting (302), or non-inverting (303). The 301 had a max input current of 2pA, but the others got as low as 0.5pA. The 301 sold for $198, while the 302A and 303A were $110.

Lewis R. Smith designed these amplifiers, as well as their successors, models 310 and 311 (see Reference 17). These latter designs were able to achieve significantly improved input currents, which were ±10fA for the signal input of both amplifiers (just about 3 orders of magnitude below the GAP/R P2 series). An input current specification this low was then (and still is) a most impressive achievement. Interestingly, the 310 and 311 models were also sold for lower prices, which was $75 for the J grade.

Lewis Smith also described his varactor bridge designs in a patent (see Reference 18). It is a high tribute to the model 310 and 311 designs that they are still being produced in 2002. The devices are available through Intronics (see Reference 19).

The Many Op Amp Categories

Many of the earliest ADI modular op amps used bipolar transistors for the input stages, and they all used bipolar transistors in later stages. Matched duals of either bipolar or FET types were scarce in the early 1960's, but these were incorporated into designs soon after announcement. An early listing of ADI op amps has five categories; general purpose, low bias current, low drift, wideband, and high voltage/current (see Reference 20). This list was expanded considerably in only a year (see Reference 21).

In the general purposes types, the models 111 and later the 118 were popular units, due to a combination of good basic specs and attractive prices. The varactor types already mentioned led performance for low bias current types, but there were also FET input types such as the early model 142 with bias currents in the tens of pA range.

In the low drift category, various chopper amplifiers such as the 210, 211, 220, and later the 232 and 233, and the 260 led in performance, There were also low drift chopper-less amplifiers such as the 180 and 183, using precision bipolar transistor front ends. There was considerable support for choppers over the next few years (see References 22-24).

Model 121 Op Amp

A design done by Dick Burwen for ADI was the model 121, a fast, fully differential op amp, in 1966. This design demonstrates some useful circuit techniques in Figure H-11.

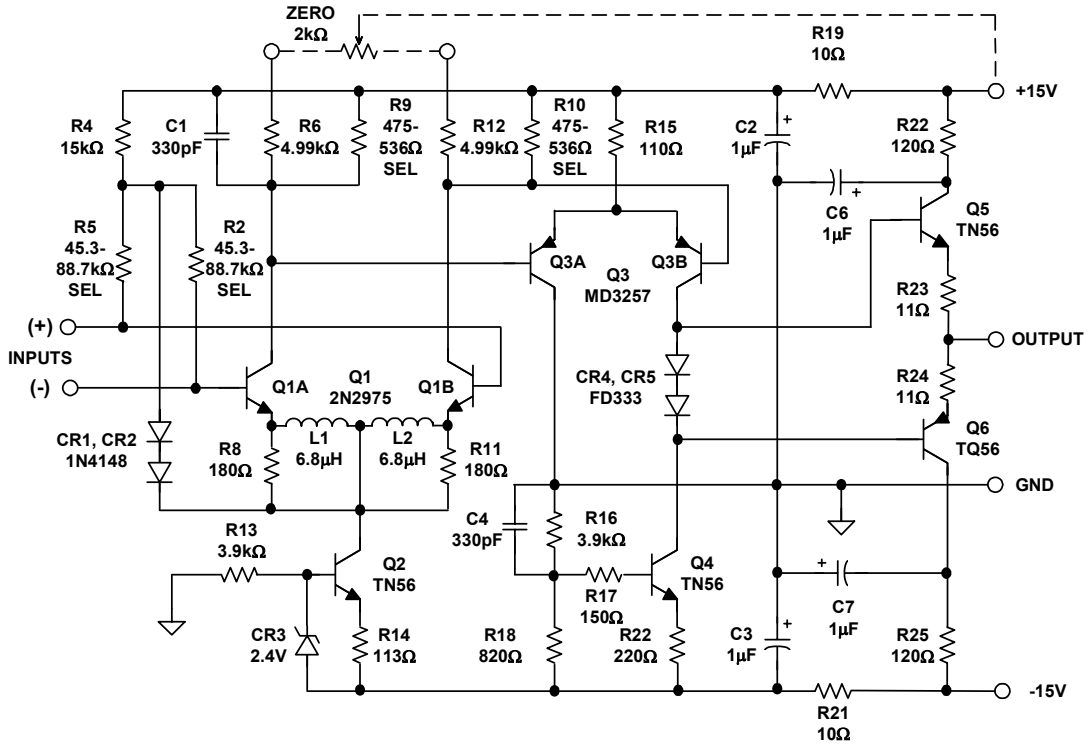

Figure H-11: *The ADI model 121 wideband DC op amp*

One of the techniques is how to make a high speed, low noise input stage, which is by means of the L1-L2 chokes. At low frequencies the chokes shunt the otherwise noisy degeneration resistors, R8-R9. It also shows the use of relatively heavy bypassing and

decoupling internal to the op amp (a necessary practical step, but possible within the confines of a module).

The model 121 NPN input stage runs at a high tail current, for fast slewing. But, note that the R2 and R5 resistors compensate the input bias current, which would otherwise be high. These (selected) resistors provide a temperature tracking bias from the floating diode source, CR1-CR2. This bias scheme was patented by Burwen, and was also used in other ADI op amps of the period (see Reference 25).

As can be noted, the model 121 used a current source for the 2N2975 matched NPN pair input stage, Q2, to optimize CMR. In critical locations, 1% metal film resistors are also used. The gain-of-five stable model 121 had a gain of 25,000 (or 88dB), achieved a slew rate of 250V/µs, and sold for $98 in 1968 (see Reference 20, again).

Analog Dialogue Magazine is Born

The ADI continuing thread of customer support through applications information was enhanced considerably in 1967, when the magazine **Analog Dialogue** was launched (see Reference 26). The initial charter for the magazine was stated as "A Journal for the Exchange of Operational Amplifier Technology", later on this was broadened to "A Journal for the Exchange of Analog Technology".

But, disseminate op amp info is what the early **Analog Dialogue** did, and also what it did well. The premier issue featured an op amp article by Ray Stata that is still available as an app note (see Reference 27). And, a similar comment can also be made for a subsequent Ray Stata article (see Reference 28).

A milestone in the life of the young magazine was the arrival of Dan Sheingold as editor, in 1969 (see Reference 29). Already highly experienced as a skilled op amp expert and editorial writer from vacuum tube and early solid-state years at GAP/R, Dan Sheingold brought a unique set of skills to the task of editorial guidance for **Analog Dialogue.** Dan's leadership as editor continues today, in 2002. For more than 33 years his high technical communication standards have been an industry benchmark.

A Family of High Speed FET Op Amp Designs

One of the more illuminating development threads to be found within the ADI op amp portfolio is that of the high speed, FET input modular and hybrid products. This design family began with the model 45 in 1970 (see Reference 30). John Cadigan designed all of these amplifiers, and they continued evolving over the next 10 years or more.

The reasons for this product line's longevity (which extended well into the era of IC op amps) is simply that these amplifiers met difficult technical needs. These needs weren't to be solved by early IC amplifiers, and indeed were not met by ICs at all, until better processes became available. The combination of high speed (meaning here fast settling to a defined narrow error band) and excellent DC accuracy made these high speed FET amplifiers the best answer for accurately driving A/D converters and other accuracy-critical amplifier needs.

Model 45, 44 and 48 FET Op Amps

The model 45 was out first, and was targeted for lower cost applications, with under 1µs settling time to 0.01%. The next two models of the series were the 44 and 48, as represented in a simplified schematic shown in Figure H-12 (see References 31-34). The model 45 schematic is similar to the 44 and 48, with some simplifications.

All of these amplifiers used FET inputs, based on a high speed matched NFET pair, Q2. For the 44 and 48, a balanced PNP current mirror loaded the input stage. The mirror output signal drove integrator stage Q6 via a Darlington buffer, Q5. The input stage ran at about 1mA/side, and the 44/48 had slew rates of 75 and 110V/µs, respectively.

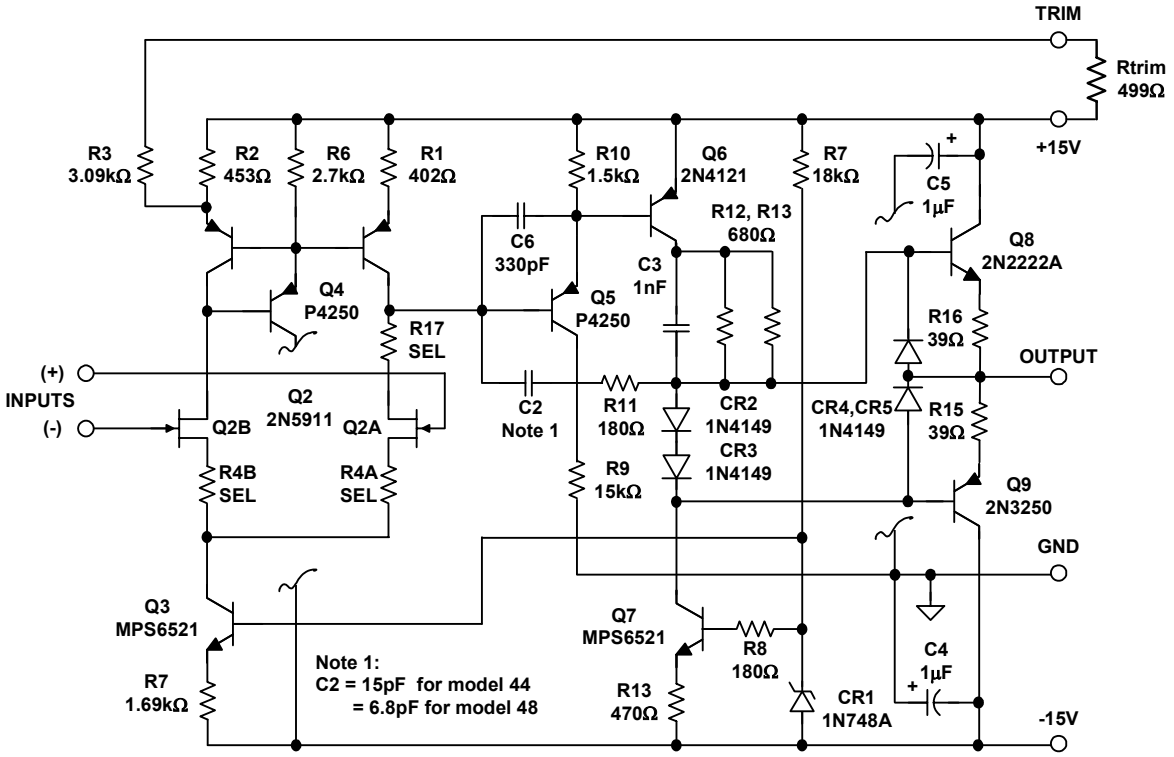

Figure H-12: *The ADI model 44 and 48 high speed FET-input modular op amps*

Like the model 45, quick settling to a rated error band as low as 0.01% was a key feature of the 44 and 48. These amplifiers achieved 0.01% guaranteed settling of 1000 and 500ns limits respectively, for up to ±10V of output, in either inverting or non-inverting modes.

In addition, these models all had class-AB output stages, and were well-suited towards driving coax lines. They used a standard 1.125" square module package, with pinouts as noted. A 499Ω trim resistor between the trim pin and $+V_S$ provided the rated DC offset without trimming, or, alternately, a 1kΩ pot was used for a more precise trim.

Development of the line continued after models 44 and 48, and included others in the series, the model 46, and the 47.

The Model 50 FET Op Amp

The highest speed version of the series came about with the model 50 modular op amp, which appeared in 1973 (see References 35 and 36). Circuit details of the model 50 will be more apparent with the discussion of the HOS-050, immediately below.

The HOS-050 FET Op Amp

Prior to being acquired by ADI in 1979, Computer Labs (Greensboro, NC) was in the business of building high speed data acquisition systems. As part of their A/D converter architectures, they routinely used fast op amps to drive the converters, employing amplifiers with characteristics like the model 50 from ADI.

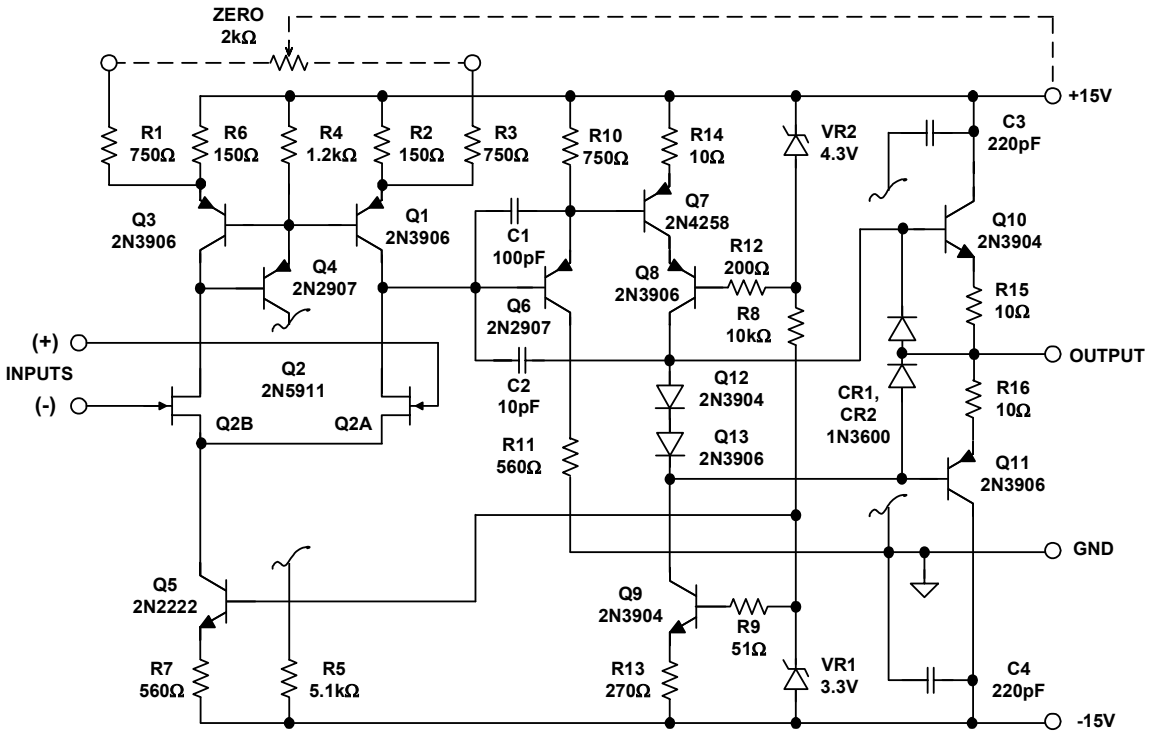

Figure H-13: *The ADI HOS-050 high speed FET-input hybrid op amp schematic*

In 1977 Computer Labs developed a hybrid IC version of the ADI model 50, calling it the HOS-050 (see Reference 37). A HOS-050 schematic is shown in Figure H-13.

There are many similarities between this and the earlier amplifier shown in Fig. H-12, but the differences are mostly speed-related. As can be noted, the HOS-050 input stage runs at higher current, for higher slew rate and bandwidth. Likewise the Q7 integrator stage is run at a higher level, and is also cascoded by Q8. The HOS-050 used a balanced form of DC offset trim, which, even if disconnected, allowed the op amp to function well.

The output stage used fast transistors, with a higher threshold level of current limiting. The entire circuit ran on the warm side, dissipating about 600mW on ±15V supplies.

The model 50 and the HOS-050 had rated outputs of ±10V, and ±100mA, a 100MHz bandwidth, and the HOS-050 settled to 0.01% in 200ns. Both the model 50 and the HOS-050 without doubt achieved the highest levels of performance.

In addition, the HOS-050 represented perhaps one of the more impressive hybrid op amp ICs built at ADI, with its combination of excellent specs, contained within a small TO-8 package. After the acquisition of Computer Labs by ADI, there were two top quality hybrid IC production facilities available to ADI customers. One of these was in the Boston area, with the other at ADI Greensboro, the former Computer Labs site.

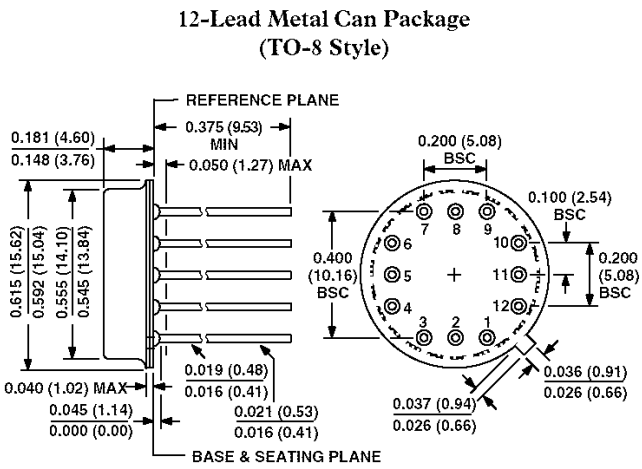

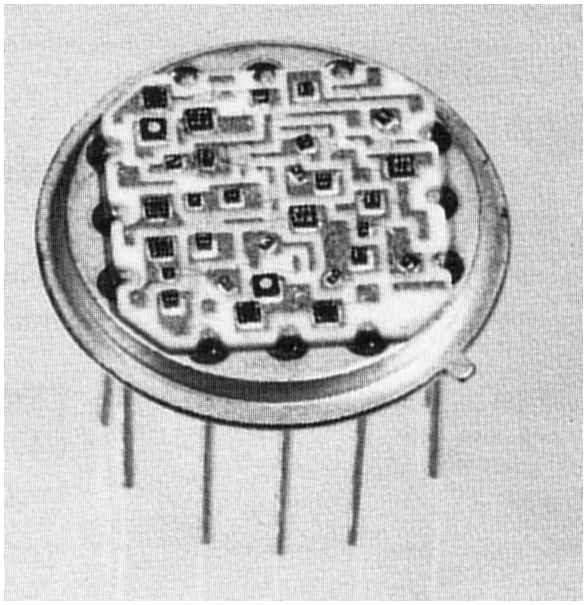

Figure H-14: *The ADI HOS-050 high speed hybrid IC op amp*

There were several other hybrid IC op amps manufactured by ADI in the 1970's and 1980's. Among these were the HOS-060, the ADLH0032, and the AD3554. Hybrid IC construction was the most dense form of circuit packaging available (save for a purely monolithic form of IC). Some appreciation for this high packing density can be gleaned from the photo of the HOS-050 IC op amp in Figure H-14 above.

In this figure, the outline for the hermetically sealed TO-8 package is shown at the left, for size reference. In the right photo of the exposed HOS-050 circuit, it can be noted that virtually 100% of the substrate area is occupied with the conductor traces and the individual circuit components, which included thin film resistors. Further, to maximize circuit area, note that the active substrate area is extended even into the four corners.

While such op amps as the model 50 and the HOS-050 may have reached pinnacles in terms of the combined circuit performance and their complexity of packaging, this situation didn't last long. Like the fate of modular op amps, hybrid op amp lifetimes were to be relatively short. As soon as IC op amps of comparable electrical performance could be built, the market for the sophisticated but hard-to-produce hybrid ICs shrunk, leaving the hybrids to be sold only into military or other long-lifetime or specialty systems.

REFERENCES: SOLID-STATE MODULAR AND HYBRID OP AMPS

(Note— appended annotations indicate relevance to op amp history.)

Birth of the Transistor

1. Ian M. Ross, "The Foundation of the Silicon Age," **Bell Labs Technical Journal**, Vol. 2, No. 4, Autumn 1997.

2. C. Mark Melliar-Smith et al, "Key Steps to the Integrated Circuit," **Bell Labs Technical Journal**, Vol. 2, No. 4, Autumn 1997

3. J. Bardeen, W. H. Brattain, "The Transistor, a Semi-Conductor Triode," **Physical Review**, Vol. 74, No. 2, July 15, 1947 pp. 230-231 *(the invention of the germanium transistor)*.

4. W. Shockley, "The Theory of p-n Junctions in Semiconductors and p-n Junction Transistors," **Bell System Technical Journal**, Vol. 28, No. 4, July 1949, pp. 435-489 *(theory behind the germanium transistor)*.

Birth of the IC

5. J. S. Kilby, "Invention of the Integrated Circuit," **IRE Transactions on Electron Devices**, Vol. ED-23, No. 7, July 1976, pp. 648-654 *(Kilby's IC invention at TI)*.

6. Robert N. Noyce, "Semiconductor Device-and-Lead Structure," **US Patent 2,981,877**, filed July 30, 1959, issued April 25, 1961 *(Noyce's IC invention at Fairchild).*

The Planar Process

7. Jean A. Hoerni, "Method of Manufacturing Semiconductor Devices," **US Patent 3,025,589**, filed May 1, 1959, issued March 20, 1962 *(the planar process— a manufacturing means of protecting and stabilizing semiconductors).*

8. Jean Hoerni, "Planar Silicon Diodes and Transistors," **IRE Transactions on Electron Devices**, Vol. 8, March 1961, p. 168 *(technical discussion of planar processed devices)*

Solid-State Modular and Hybrid Op Amp Designs

9. Burr-Brown Applications Staff**, Handbook of Operational Amplifier Applications, 1st Ed.**, Burr-Brown Research Corporation, 1963 *(Burr-Brown's early semiconductor oriented op amp application manual).*

10. Robert A. Pease, "Design of a Modern High-Performance Operational Amplifier," **GAP/R Lightning Empiricist**, Vol. 11, No. 2, April 1963. *(The designer's description of the P45 op amp. Note— Q8 polarity correction via RAP to WJ email of 5/23/2001).*

11. **Philbrick Solid-State Operational Amplifiers**, GAP/R bulletin of 3/1/1966.

12. Bob Pease, "Chapter 9, The Story of the P2," within Jim Williams, Ed., **Analog Circuit Design,** Butterworth-Heinemann**,** 1991, ISBN:0-7506-9166-2.

13. George A. Philbrick, "Electronic Amplifier," **US Patent 3,405,366**, filed June 30, 1965, issued Oct. 8, 1968 *(A varactor bridge amplifier).*

14. H. M. Paynter, "In Memoriam: George A. Philbrick," **ASME Journal of Systems, Measurement and Control**, June 1975, pp. 213-215

15. Dan Sheingold, "Analog Dialectic," **Analog Dialogue**, Vol. 30, No. 3, pp. 1.

16. Ray Stata, "Operational Amplifiers, Parts I and II," **Electromechanical Design**, September and November, 1965 *(The first ADI op amp application manual).*

17. Data sheet for **Model 310, 311 Ultra Low Bias Current Varactor Bridge Operational Amplifiers**, Analog Devices, Inc., December 1969.

18. Lewis R. Smith, "Operational Amplifier with Varactor Bridge Input Circuit," **US Patent 3,530,390**, filed Dec. 28, 1966, issued Sept. 22, 1970 *(A varactor bridge amplifier).*

19. **ADI Modular Products**, **http://www.intronics.com/products/analogproducts/**

20. **Capsule Listing of Analog Devices Op Amps**, ADI bulletin of April 1968.

21. **Selection Handbook and Catalog Guide to Operational Amplifiers**, ADI catalog of January 1969.

22. Ray Stata, "Applications Manual 201, 202, 203 & 210 Chopper Stabilized Operational Amplifiers," ADI application note, 1967 *(Use of 200 series modular chopper amplifiers).*

23. ADI Staff, "Circuit Advantages of Chopper Stabilized Operational Amplifiers," ADI application note, September 1970 *(Operation and use of inverting-type modular chopper stabilized op amps).*

24. Peter Zicko, "Designing with Chopper Stabilized Operational Amplifiers," ADI application note, September 1970 *(Operation and use of non-inverting-type modular chopper stabilized op amps).*

25. Richard S. Burwen, "Input Current Compensation with Temperature for Differential Transistor Amplifier," **US Patent 3,467,908**, filed Feb. 7, 1968, issued Sept. 16, 1969 *(A method of compensating for bias current in a differential pair amplifier).*

26. **Analog Dialogue**, Vol. 1, No. 1, April 1967 *(The premier issue of **Analog Dialogue**— 'A Journal for the Exchange of Operational Amplifier Technology').*

27. Ray Stata, "Operational Integrators," **Analog Dialogue**, Vol. 1, No. 1, April, 1967 *(Reprinted as ADI AN357).*

28. Ray Stata, "User's Guide to Applying and Measuring Operational Amplifier Specifications," **Analog Dialogue**, Vol. 1, No. 3 *(Reprinted as ADI AN356).*

29. **Analog Dialogue**, Vol. 3, No. 1, March 1969 *(The first issue of **Analog Dialogue** under the editorial guidance of Dan Sheingold).*

30. Data sheet for **Model 45 Fast Settling FET Operational Amplifier**, Analog Devices, Inc., May, 1970.

31. "New Modular Op Amps," **Analog Dialogue**, Vol. 5, No. 2, pp. 12 *(Model 43 and 44 op amps)*

32. "Op Amp Settles to 0.01% in 300ns," **Analog Dialogue**, Vol. 6, No. 2, pp. 11 *(Model 48 op amp)*

33. Data sheet for **Model 48 Fast Settling Differential FET Op Amp**, Analog Devices, Inc., June 1972.

34. Data sheet for **Model 44 Fast Settling High Accuracy Op Amp**, Analog Devices, Inc., August 1972.

35. Data sheet for **Model 50 Fast Settling 100mA Output Differential FET Op Amp**, Analog Devices, Inc., May 1973.

36. "Model 50: Wideband, Fast Settling Op Amp," **Analog Dialogue**, Vol. 7, No. 2, pp. 13 *(The model 50* modular *op amp)*.

37. Low-Cost HOS-050C is Internally Compensated, Settles to 0.1% in 80ns, 0.01% in 200ns", **Analog Dialogue**, Vol. 16, No. 2, pp. 24 *(The HOS-050C* hybrid *op amp, first introduced by Computer Labs in 1977).*

ACKNOWLEDGEMENTS:

Many helpful comments were received during the preparation of this section, and all are very much appreciated.

Particularly useful was information from two GAP/R alumni, Dan Sheingold and Bob Pease. Both offered many details of the early days of working with George Philbrick, and Bob Pease furnished a previously unpublished circuit of the P65 amplifier.

Dick Burwen offered detailed information on some of his early ADI designs, and made helpful comments on the development of the narrative.

Steve Guinta and Charlie Scouten provided many of the early modular op amp schematics from the ADI Central Applications Department archival collection.

Lew Counts assisted with comments on the background of the high speed modular FET amplifier developments.

Walt Kester provided details on the HOS-050 amplifier and its development as a hybrid IC product at Computer Labs.

NOTES:

SECTION 4: IC OP AMPS

Birth of the Monolithic IC Op Amp

The first generally recognized monolithic IC op amp was from Fairchild Semiconductor Corporation (FSC), the *μA702*. The μA702 was designed by a young engineer, Robert J. (Bob) Widlar. As will be seen, Bob Widlar was a man who was shortly to make an indelible mark on the IC world. But, his 1963 μA702 didn't exactly take the world by storm. It wasn't well received, due to quirky characteristics— odd supply voltages, low input/output swings, low gain, etc. Nevertheless, despite these shortcomings, the μA702 established some important IC design trends. As pioneered by Bob Widlar, these concepts were to carry over to future op amps (see Reference 1). In fact, they are standard linear IC design concepts yet today. While the μA702 isn't covered in detail here, information on it can be found in Reference 2.

The μA709

Not long after the μA702 a major IC op amp landmark came about, specifically the introduction of another Bob Widlar op amp for Fairchild in 1965, the *μA709,* (see Reference 3). The 709[1] improved markedly on the 702; it had higher gain (45,000 or ~94dB), greater input/output ranges (±10V), lower input current (200nA) and higher output current, and operated from symmetrical power supplies (±15V). The 709 quickly became a standard, and was produced for decades. Figure H-15 below is a 709 schematic.

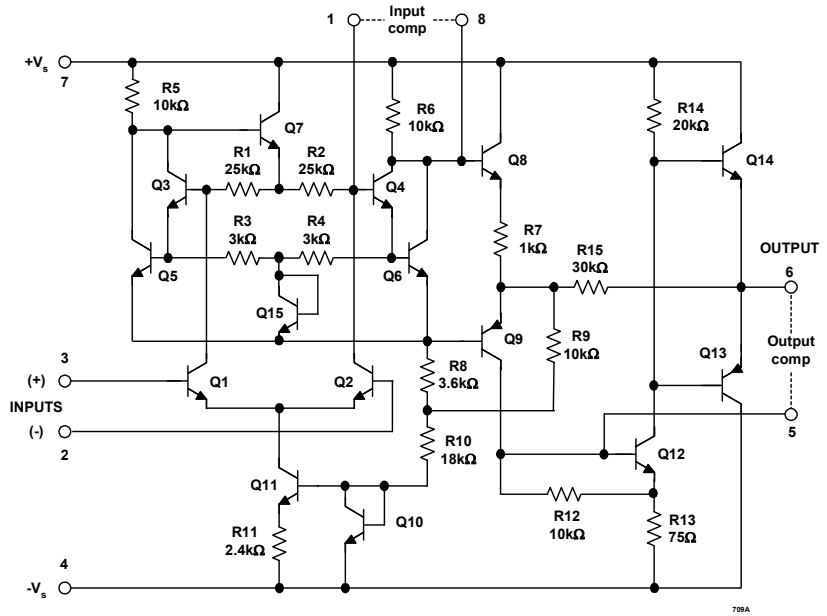

Figure H-15: *The μA709 monolithic IC op amp*

So universal was the 709 that it can be regarded as an IC op amp classic. Although the individual specifications were surpassed by many subsequent designs, the 709 remains a milestone, as the first widely used monolithic IC op amp.

---

[1] Although the original Fairchild designation was "μA709," the design was broadly second-sourced. The widely-used generic name became simply "709". Likewise, the μA702 is known as the "702".

Many design principles from the 702 were used again in the 709, such as the use of matched transistors, for the first and second stages, and the logarithmic biased (delta-V_{BE}) current source, Q10-Q11. There were also new wrinkles added. Because the 709 used what was basically an NPN IC process, Widlar resorted to some clever tricks to create PNP functions. He used a modified NPN structure for two PNPs, the level shifter Q9 and the output PNP, Q13. The output stage operated class-B, with no Q13-Q14 bias. Local feedback around this stage via R15 minimized deadzone.

Frequency compensation for the 709 was achieved with two RC networks, between pins 1-8, and pins 6-5. The associated network values could be changed for optimum AC response, using 4 networks for gains of 0 to 60dB.

Although the 709 was a vast improvement over the 702, it still had quirks of its own, and these gave rise to application problems. For example, without some user-added series resistance, the output stage could blow out for sustained shorts. Many saw the frequency compensation scheme as difficult, plus it took up board space. Also, the 709 could latch up, whenever the input CM voltage rose high enough to saturate the input stage. And, excessive differential input voltages could blow out the input transistors. Although savvy users could work around these 709 application quirks, it sometimes took extra parts to do it. So, in one sense the above use-related issues served as a general lesson towards the necessity of bullet-proofing an IC op amp against various application stresses.

The LM101

Not content to rest on his 702 and 709 laurels, Bob Widlar moved on to another company, National Semiconductor Corporation (NSC). His next IC op amp design, the *LM101*, was introduced in 1967 (see Reference 4). This began a second IC op amp generation (the 709 is generally regarded as the first generation of IC op amps).

The LM101 family[1] used a simpler two-stage topology, one that addressed the application problems of the 709. It was also an op amp design that influenced a great many ones to follow. A simplified circuit of the 101 is shown in Figure H-16 (opposite).

The LM101 design objectives were to eliminate such 709 problems as:

- No short-circuit protection.
- Complex frequency-compensation.
- Latchup with high CM inputs.
- Sensitivity to excessive differential input voltage.
- Excessive power dissipation and limited power supply range.
- Sensitivity to capacitive loads.

For the same reasons that the 709 has historical importance, so does the LM101, as it represents the next op amp technology level. In fact, the all-purpose topology used is the basis for a range of many other general-purpose devices, variants of the LM101 design.

[1] The LM101 family included three temperature ranges, LM101, LM201 and LM301, for military, industrial and commercial ranges, respectively. Also known generically as 101, etc. Similarly, the following LM101A series devices became know as 101A, 201A, 301A, etc.

The new 101 design did solve the 709's problems, and it added some further refinements. Gain was 160,000 (~104dB), and the useful supply range increased from ±5V to ±20V. For easy upgrading, the 101 used the same pins as 709 for inputs, output, and power.

A major goal of the 101 design was simpler frequency compensation. To enable this, the 101 uses a *two-stage* amplifier design, as fewer stages are easier to compensate. But, to retain high voltage gain, the two stages needed the gain of the three 709 stages. In the 101, the high gain per stage is done using active loads, which increase the available gain per stage to a maximum. An example is Q13, which provides the collector load for Q9.

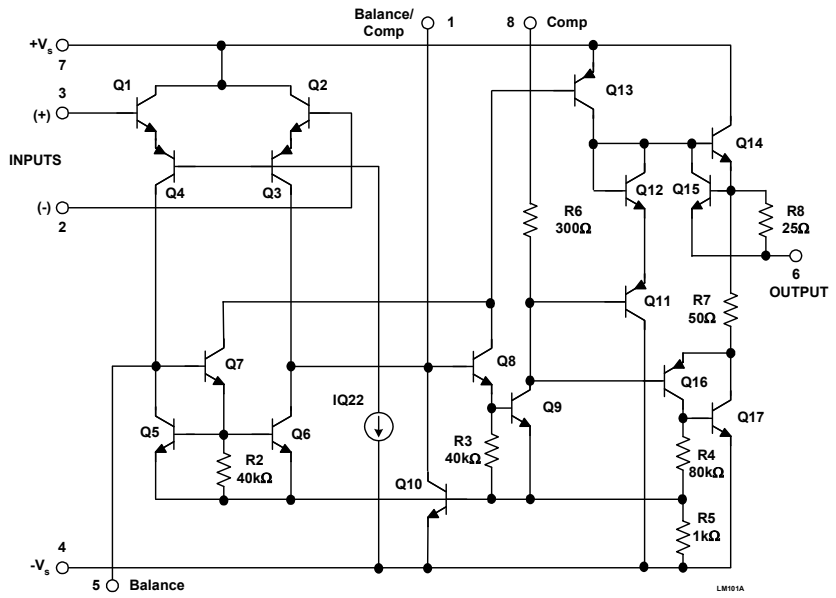

Figure H-16: *The LM101 monolithic IC op amp*

In the first stage of the 101, active loading is also used, Q5-Q6. Q1-Q4 and Q2-Q3 here form an equivalent PNP differential pair. Although the PNPs have low gains, they are buffered by high-gain NPNs, Q1-Q2. The net resulting input current was 120nA.

Note that the CM input range of this stage is quite high, as Q1-Q2 can swing positive to $+V_S$. The negative CM limit is about four V_{BE} above the $-V_S$ rail. This wide CM range prevents input stage saturation and latch-up. Another feature of this composite input stage is a very high differential voltage rating, due to the PNP high base-emitter breakdowns. The input stage can safely tolerate inputs of ±30V.

The second stage of the 101 is the common-emitter amplifier, Q9. With the above mentioned loading of Q13, this stage achieved a voltage gain of about 60dB, and the overall gain of the op amp was typically over 100dB. A class AB output stage is used, consisting of NPN Q14, and the equivalent PNP, Q16-Q17. These transistors were biased by Q11-Q12. Sensing resistors R7, R8, and Q15, along with an elaborate loop comprising Q16 and Q9-Q10, provided current limiting.

An important differentiation of the 101 versus the 709 was the much simpler frequency compensation. In the 101, this was accomplished by a single external 30pF capacitor,

connected between pins 1 and 8. As can be noted from the 101 internal connections, this capacitor makes the second gain stage Q9 an integrator, forcing overall gain to roll off from its maximum value of 104 dB at 10Hz at a rate of 6dB per octave, crossing unity gain at about 1MHz. This compensation made a 101 device stable in any feedback configuration, down to the unity gain.

Viewed analytically, the 101 op amp topology can be seen as a two-stage voltage amplifier, formed by an input g_m stage consisting of Q1-Q6, which drives an integrator stage Q9 and the compensation capacitor, and a unity gain output buffer, Q11-Q17. This type of topology is discussed further in Chapter 1 of this book.

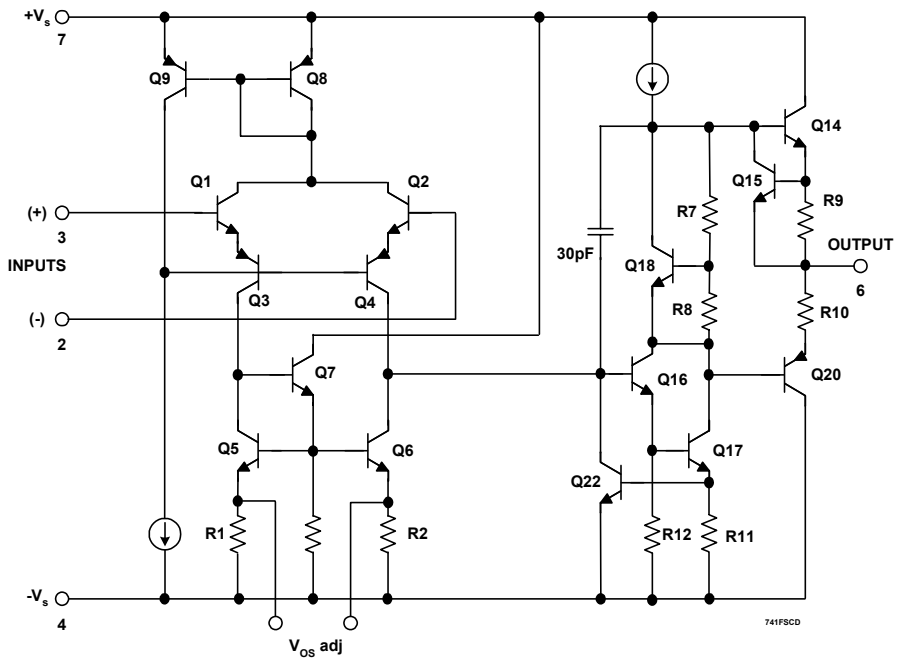

Figure H-17: *The μA741 monolithic IC op amp*

But, a salient point to be noted is the fact that this form of compensation takes advantage of *pole splitting* in the second stage, which results in the multiplied capacitance of the compensation capacitor to provide a stable –6dB/octave roll off (see Reference 5). This was a critically important point at the time, as it allowed a single small (30pF) capacitor to provide the entire compensation. Many two-stage IC op amp architectures introduced since the original 101 use a similar signal path and compensation method.

The μA741

In less than a year's time after the 101's introduction, Fairchild introduced their answer to it, which was the *μA741* op amp. Designed by Dave Fullagar and introduced in 1968, the μA741 used a similar signal path to the LM101 (see Reference 6). A simplified schematic of the μA741 is shown above in Figure H-17.

Although there are obvious biasing differences, the 741 signal path is essentially equivalent to the 101, and it provides similar features in terms of short-circuit and input

over-voltage protection, and has a comparable bandwidth. Nevertheless, for the reason that the 741 had the 30pF compensation capacitor *on the chip*, it became the standard. [1]

The moral here seems to be that ease-of-use is more valuable to users than is flexibility. The 101, with the user-added capacitor, was functionally equivalent to the 741. In fact, National Semiconductor had introduced the *LH101*, a hybrid package of an LM101 chip plus a 30pF capacitor, in early 1968. But nevertheless, the 741 became a greater standard.

The LM101A

Bob Widlar updated his basic LM101 design with the *LM101A*, which was introduced by National Semiconductor in late 1968. This was a more refined version of the 101 op amp architecture, featuring lower and more stable input bias current (see Reference 7).

At about the same time, they also introduced the *LM107*, which was an LM101A with the 30pF compensation capacitor on the same monolithic chip. The 107 and 741 could be said to be comparable for AC specifications, but the 107 had an edge for DC parameters.

The μA748

The *μA748*, an externally compensated derivative of the μA741, was introduced by Fairchild in 1969. It was Fairchild's answer to the National LM101/LM101A series. The 748 functioned just like the 101/101A types, with an external capacitor between pins 1-8.

Multiple 741 types, General Purpose Single-Supply Types

With the 741 being such a popular device, it lent itself readily to dual and quad versions. Space doesn't permit discussion of all, but among the more popular were the Motorola *MC1558/1458*, a pair of 741s in an 8-pin DIP pinout. Almost since the beginning dual versions have been the more popular for IC op amps. Quad 741 types also became available, such as the Motorola *MC4741*, and the National Semiconductor *LM148*.

In 1972, Russell and Frederiksen of National Semiconductor introduced an amplifier technique suitable for operation in a single-supply environment at low voltages (see Reference 8). This amplifier, which was to become the *LM324*, became the low cost industry standard general purpose quad op amp. It was followed by a similar dual, the *LM358*. One of the key concepts used in the paper was an input stage g_m reduction method, credited to James Solomon (Reference 5, again).

Since this is a historical discussion of IC op amps, one would assume that all of the above general purpose IC op amps would have long since disappeared, being 30-odd years old. But such isn't the case— many of them are still available even now, in 2002!

---

[1] George Erdi told an interesting story of the μA741's genesis while working at Fairchild and sharing an office with the designer, Dave Fullagar. It seems that shortly after the LM101 appeared, the two were discussing the reason why the required compensation cap was external. Fullagar's conclusion was that the National process in use at the time simply couldn't accommodate the internal capacitor. He said, "*Well, we can do that!*" and so, shortly afterwards, the internally compensated μA741 was born.

The AD741— a Precision 741

Neither the 741 nor the 101A were designed as true high precision amplifiers. In the years following the development of the 741 and 101A op amps, other IC manufacturers looked into refining the performance of these popular products for the precision analog marketplace. In 1971 ADI took a key step towards this, and acquired Nova Devices of Wilmington, MA. This added both technology and design capability to the ADI portfolio, which was to be immediately useful for the manufacture of linear ICs.

One of the first ADI ICs to be produced was an enhanced design 741 type op amp, the *AD741* (see Reference 9). A schematic of this circuit is shown in Figure H-18 below.

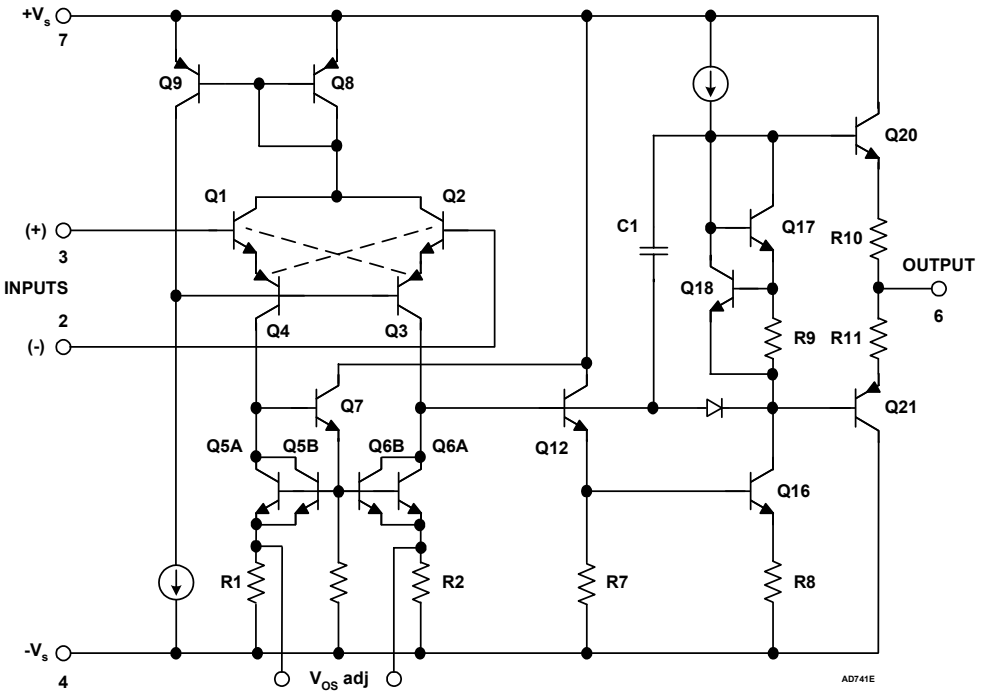

Figure H-18: *The AD741 monolithic IC op amp*

Although this circuit looks deceptively like the μA741 of Fig. H-17, it should be understood that there are many subtleties affecting IC performance that don't necessarily appear on the data sheet. In this case, some key differences include a thermally balanced layout, evident from the use of a cross-quad input stage (denoted by the Q1-Q4 cross markings), and the quad operation of the current mirror load transistors, Q5-Q6. In addition, a better output stage was used, with higher efficiency transistors.

The premium version of this design was the AD741L, which achieved an offset of 500μV(max), a drift of 5μV/°C(max), a bias current of 50nA(max), and a minimum gain of 50,000 (94dB) into a 2kΩ load. ADI also produced an improved 301A type amplifier, the AD301AL, with DC specifications similar to those of the AD741L above.

In 1973, the AD741L sold for $6.00 in 100 piece lots, while the AD741J could be purchased for just $1.25 in the same quantities.

With the establishment of general purpose IC op amps a fact, other designers began to focus on greater precision. This was sought through the reduction of various errors; lower bias currents, lower offset voltage, higher gain, etc. A couple of the development paths that follow the general thread of higher IC op amp precision will now be discussed.[1]

Super-Beta IC Op Amps— LM108 to OP97

After his release of the 101 op amp, Bob Widlar began to explore the *super-beta* bipolar transistor technique.[2] A super-beta transistor is one subjected to extra diffusion steps, so as to raise the forward gain from a typical 200, to several thousand or more. Used in the input stage of an IC op amp, a pair of super-beta transistors can potentially reduce input currents by a factor of 10-20 times.

However, the use of super-beta transistors isn't exactly straightforward, because the super-beta process reduces the breakdown voltage to 5V or less. This factor requires extra circuitry around the super-beta devices, to buffer high voltages normal to an op amp.

The first IC to use super-beta transistors was the LM102 voltage follower of 1967, by Bob Widlar (see Reference 10, followed by the upgraded LM110 in 1970. Widlar also published a more general description of super-beta transistor operation, in Reference 11.

The 102 and 110 voltage follower ICs were somewhat specialized parts. Internally configured as unity-gain buffers, there was no user configuration needed (or possible). Nevertheless, the use of the super-beta devices at the input established their viability, at least in one context of application.

Meanwhile, in these very early years of the technology, Bob Widlar wasn't the only designer working on super-beta concepts as applied to op amps. At Motorola Semiconductor, Solomon, Davis and Lee developed the *MC1556* op amp, reporting on it in early 1969 (see Reference 12). [3]

This two-stage op amp design used a combination super-beta NPN pair, combined with a PNP pair as the input stage. With a quoted super-beta transistor gain of 4,000, the design had a 2nA input current. It was also known for an appreciably higher slew rate than the 741 or other devices available at the time.

---

[1] For coherence, this super-beta precision op amp (and other) threads will be presented in a continuous fashion. In actual time of course, each thread paralleled many other concurrent IC op amp developments.
[2] To avoid confusion, the term "super-beta" should really be "super-H_{FE}"— but "super-beta" has stuck.
[3] Rather ironically, the 1556 op amp may not have gotten all the credit due, as perhaps the earliest use of super-beta devices, within a general purpose op amp. A second irony is that the paper itself is better known (and often quoted) for the establishment of input stage g_m reduction as a means of raising slew rate.

In late 1969, Bob Widlar contributed another IC op amp design, the *LM108* (see Reference 13). The LM108 was the first of what turns out to be a long line of precision IC op amps with low input currents, by virtue of a super-beta input transistor front end. A simplified schematic of the LM108 is shown in Figure H-19, below.

In this circuit the super-beta NPN devices are indicated by a wider base in the symbol, and the remaining transistors are high voltage types. Q1-Q2 make up the super-beta input differential pair, and are cascoded by Q5-Q6. The diode drops biasing this cascode are arranged so that Q1-Q2 see a 0V V_{CE}. The second stage on the 108 is a PNP differential pair, Q9-Q10, with a balanced load, Q21-Q22. The output voltage is developed at the emitter of Q14, and buffered by a class AB output stage.

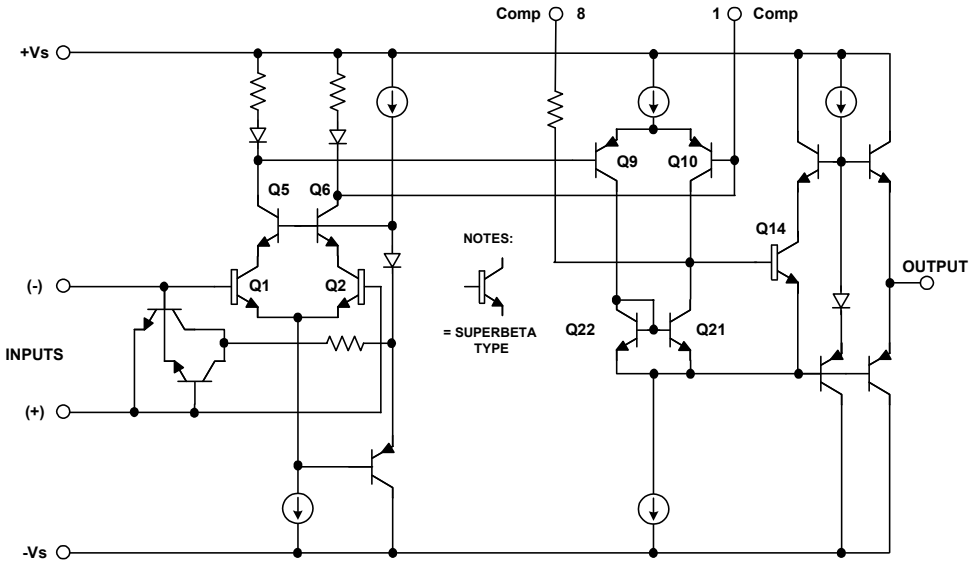

Figure H-19: *The LM108 super-beta input monolithic IC op amp*

The 108 design achieved a notably low bias current, typically under 1nA at room temperature. Offset voltage was typically 700µV and 2mV(max), and gain was 300,000 (or 110dB). It had very wide input and output ranges, typically ±14V operating from ±15V supplies, and it consumed 300µA of quiescent current. Further, it could operate down to supplies of ±2V, making it useful on 5V rails. A point worth noting here is that the 108 differed from Widlar's previous LM101/101A designs with a load rating of 10kΩ (whereas the 101/101A could drive 2kΩ at rated gain). This was obviously a byproduct of the low power nature of the 108 design.

The basic LM108 design was later upgraded by National, to the *LM108A*. This was a 500µV(max) offset voltage version of the part. An internally compensated version was also offered, the *LM112*.

Later on in time, many other companies brought out their own competitive versions of the 108 and 112 op amps, with similar sounding names, and some with much improved performance. In the 1970's, ADI was one such company, offering the AD108 and AD108A, with specifications like the originals.

In 1969 Marv Rudin and Garth Wilson formed Precision Monolithics Incorporated (PMI), a brand new company with a charter of precision linear ICs. PMI introduced their counter to the 108A, the *OP08*, in 1976. This wasn't simply a second source to the 108A, but a revised and upgraded design by George Erdi and Larry Farnsley. Erdi was known as the father of the Fairchild μA725 (and the SSS725, at PMI). Erdi came to PMI in 1969, from Fairchild, where he had already established some key op amp design concepts (see narrative on 725 to OP07).

The new OP08 design added a thermally balanced layout, to reduce offset voltage and to increase gain. This was reflected in an offset voltage of 150μV(max) for the best grade, a minimum gain spec of 50,000 (94dB) into a 2kΩ load (other specs were comparable to the 108A). At the same time the PMI *OP12* was introduced. This was a device similar to the OP08, but with internal compensation, and one which competed with the 112.

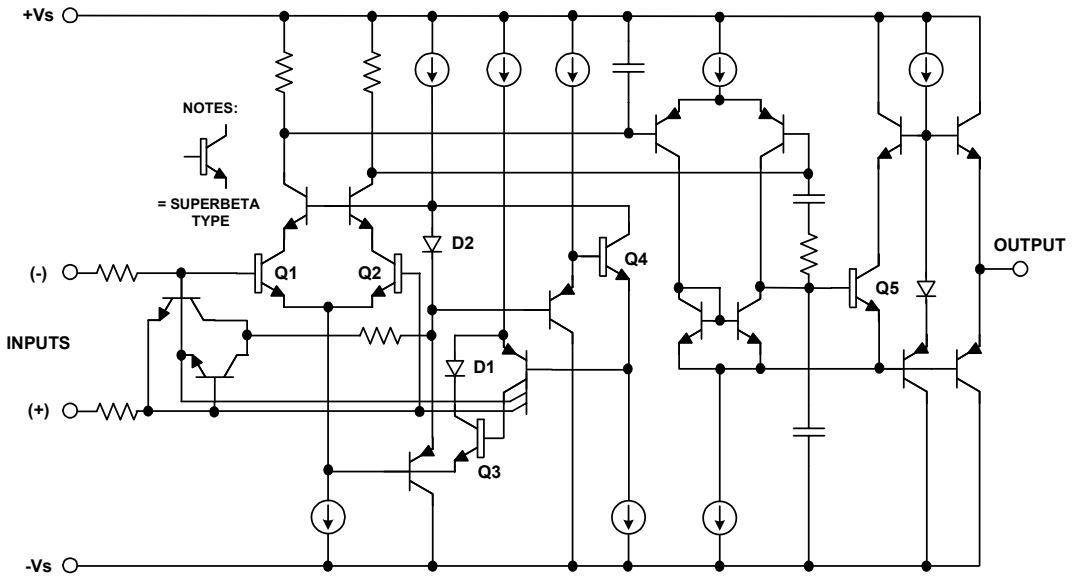

Figure H-20: *The OP97/297/497 super-beta input monolithic IC op amp*

Another IC company to introduce 108/112 style designs was Linear Technology Corporation (LTC). Formed in 1981 by former National and Precision Monolithics engineers, Linear Technology introduced their own super-beta op amps, the *LT1008* and *LT1012* in 1983 (see Reference 14). Designed by a team headed by former PMI op amp designer George Erdi, the LT1008 featured trimmed offset voltage of 120μV(max), a drift of 1.5μV/°C(max), and a minimum gain of 120,000 (~102dB) driving 2kΩ. A notable feature of these amplifiers versus the earlier 108A types was the use of *input bias current cancellation*, allowing an LT1008 bias current as low as ±100pA(max).

Precision Monolithics followed up on the OP08 and OP12 designs with the *PM1008* and *PM1012*, released in 1987. These were designed by Peter Gaussen of the Twickenham UK design center. The PM1008 had specs comparable to the LT1008, and the PM1012, to the LT1012. Also in 1987, the performance bar was raised a bit higher by the introduction of the even more tightly specified PMI *OP97*, an internally compensated super-beta input op amp functionally like the 112 or 1012. A simplified schematic of the OP97 family is shown above in Figure H-20.

The OP97 best grade (A, E) offers an offset voltage of 25µV(max), a drift of 0.6µV/°C(max), a bias current of ±100pA(max), and a minimum gain of 200,000 (106dB) driving a 2kΩ load. It is notable that the OP97 was marketed as a "low power OP07," which of course it isn't, technically speaking. [1] The OP97 uses a two-stage topology, the OP07 a three-stage. Not at all the same inside— but to many users, lower power with precision can be very important, rendering the internal differences moot.

The OP97 is still available even today, as are the other dual and quad family members, the OP297 (dual) and OP497 (quad) devices. The latter devices were designed by Derek Bowers, adding laser trimming (as opposed to the use of zener-zap trim on earlier family devices), and were released in 1990 and 1991.

The AD508 and AD517

ADI entered the super-beta op amp game at an early point, with their own super-beta input part, the *AD508*, an externally compensated precision device (see Reference 15). Designed by Modesto "Mitch" Maidique who came to ADI from Nova Devices, the AD508 released in 1972, It was an upgrade of his 1971 ADI precision op amp design, the *AD504*, which was a very high precision op amp in its own right (see Reference 16).

Quite unlike the 108 series of op amps topologically, the AD508 could be said to be an inherently high precision design. It featured the use of thin-film resistors, a super-beta input stage with balanced active loading, and a thermally balanced layout. The design used a two-stage double-integrator topology, with a triply buffered output, for very high load and thermal immunity. The AD508K typically achieved an open-loop gain of ~138dB while driving 2kΩ (much higher than any 108 or 112 topology amplifier), a bias current under 10nA, and a low drift of 0.5µV/°C(max) (see Reference 17).

An internally compensated version of the AD508 was introduced in 1978, the *AD517* (see Reference 18). This amplifier also used a super-beta input stage, and added the important feature of laser wafer trimming (see Reference 19). This trimming allowed offset voltage to be held as low as 25µV(max), and drift as low as 0.5µV/°C(max), both for the highest grade, the AD517L.

Much later on, ADI also introduced its own series of internally compensated super-beta op amps, styled along the lines of the OP97 series of devices. These were the AD705 (single), AD706 (dual) and AD704 (quad) series of op amps (see References 20-22). Designed by Reed Snyder, these op amps were introduced in 1990 and 1991.

Precision Monolithics was purchased by ADI in 1990, and the op amp product lines of the two companies were merged. Today, the product catalog of ADI includes many ADI originated (ADxxx) as well as many original PMI products (OPxxx).

---

[1] Former PMI and ADI op amp product line director Jerry Zis relates that while the OP97 may have been marketed with a focus on the OP07 users looking for a lower power device, this niche was nevertheless a real need. Of course, it also helps to have great specs, plus a family of dual and quad devices, which the standard OP07 never did have— but which the OP97/297/497 family eventually provided.

Precision Bipolar IC Op Amps— μA725 to the OP07 families

A second thread of development for precision op amps started at roughly the same time as the LM108 design, in 1969. Working then for Fairchild Semiconductor, George Erdi developed the *μA725*, the first IC op amp to be designed from the ground up with very high precision in mind.

In a rather complete technical paper on the 725 circuit and precision op amp design in general, Erdi laid down some rules which have become gospel in many terms (see Reference 23). A simplified schematic of the 725 is shown below in Figure H-21.

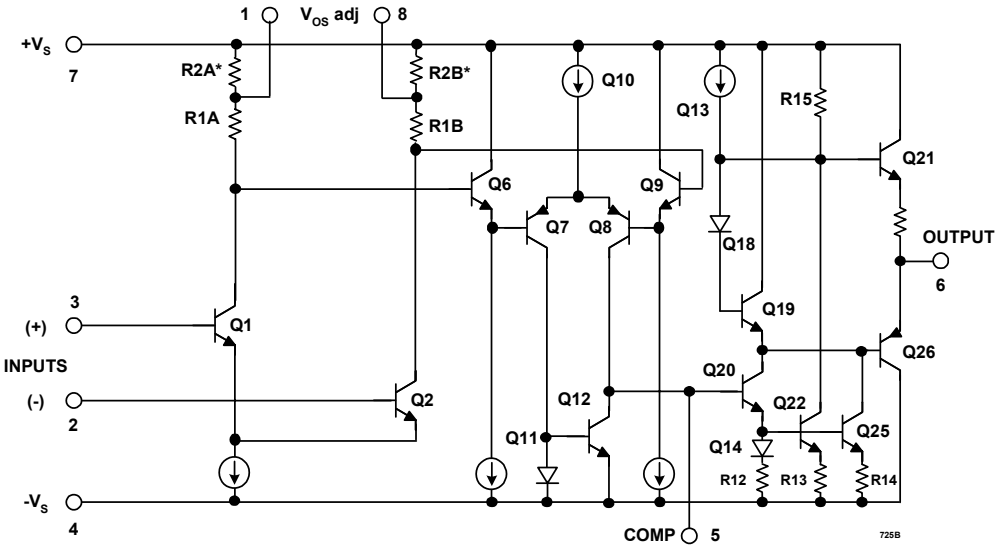

Figure H-21: *The μA725 monolithic IC op amp*

The 725 is basically a three stage design, consisting of a differential NPN input pair Q1-Q2, followed by a second differential stage, Q7-Q8, and a final single-ended output stage Q22, which is buffered by class AB emitter followers Q21 and Q26. The circuit was externally compensated by a four component RC network at pin 5. The three stages yielded much higher gain than previous two-stage amplifiers, but at the expense of more complex compensation.

Optional trimming of input offset voltage took place at pins 1-8, where an external 100kΩ pot with the wiper to $+V_S$ was adjusted for lowest offset. When done in this manner, this also gave lowest drift.

There are some circuit subtleties belied by the schematic's simplicity, but yet important. Q1 and Q2 are actually a quad set (dual pairs), with the paralleled pairs straddling the chip's axis of thermal symmetry. The idea behind this was that thermal changes due to output stage dissipation would be seen as equal thermally induced offsets by the two input stage halves, and thus be rejected. This principle, first established in the 725 design, has since become a basic precision design principle (see Reference 15, again, and within Reference 23, the Fig. 2 chip photograph).

Another key point of 725 performance optimization concerns offset nulling for a condition of zero input offset and lowest drift, described in some detail by Erdi within References 23 and 24. The 725 had a typical offset voltage spec of 600µV, and with the offset nulled as recommended, the resulting drift was 0.6µV/°C. The bias current was typically 45nA, and open-loop gain was 132dB.

George Erdi left Fairchild in 1969, to join the newly formed PMI. At PMI, he continued with the 725 precision amplifier concept, designing the SSS725 version.[1] This op amp was identical to the original in functionality, but offered improved performance. There was also an OP06 produced at PMI later on. The OP06 was like the 725, but with the addition of differential input protection.

Not too long after the SS725 at PMI came the *OP05* op amp, in 1972 (see Reference 25). With the new OP05 design George Erdi simplified application of precision op amps considerably, by making it internally compensated, adding input bias current cancellation, and differential overvoltage protection. Topologically, the OP05 can be said to be identical to the 725's three-stage architecture, with these enhancements.

Now, precision op amp users had a simple-to-apply device. But, a major system error was still left to the user to deal with, which was offset voltage. The OP05 used a manual trimming scheme similar to the 725 for offset adjustment, via a 20kΩ pot. The unadjusted maximum offset for the OP05 was 500µV, and drift was 0.6µV/°C after null.

The OP05 was successful in its own right, but the offset voltage issue was still there. About this time, other IC companies were turning to active wafer trim schemes, such as the aforementioned ADI laser wafer trimming scheme (Reference 19, again). The next phase of 725 and OP05 evolution was to address active trimming of op amp offset, so as to deliver higher accuracy in the finished op amp device.

In 1975, Erdi reported on an offset trim technique that used 300mA over-current pulses, to progressively short zener diodes in a string. With the zener string arranged strategically in the input stage load resistances of an op amp, this so-called "zener-zapping" could be used to trim the offset of an op amp on the wafer (see Reference 26). The first op amp to utilize this new trim technique was Erdi's *OP07*, which was introduced by PMI in 1975 (see Reference 27).

In the OP07, shown in simplified schematic form in Figure H-22, opposite, the (not shown) zener strings are connected in parallel with segmented load resistances R2A and R2B. A simplified schematic of the scheme is shown in Reference 27, Fig. 3, but in essence the series of zener diodes parallel the segmented partial load resistances, the values of which are sized to control progressively larger offsets.

At trim time, a computer measures the actual op amp offset, then selects the appropriate zener to reduce it to the next level, and then zaps that zener with a high pulse of current.

[1] The "SSS" prefix was used on early PMI amplifiers, and stood for Superior Second Source. Another example was the PMI SSS741.

This current pulse effectively shorts the zener, and so the section of load resistance in parallel. This process is iterated until the offset cannot be reduced further.

The new OP07 thus created had some impressive offset specifications. It was reported that the entire distribution of parts trimmed had offsets of 150µV or less, and a prime grade, the OP07A was specified at 25µV(max) for offset. Importantly, since this trim method also simultaneously reduced drift as the offset is nulled, the trimmed OP07 amplifiers had drift rates of 0.6µV/°C(max), and typically much less than this.

The zener-zap trim technique was a valuable innovation in its own right, as it could be applied to other devices to reduce errors, and at a low additional cost to the manufacturing process. It is today one of many active trim techniques used with precision op amps (see the more detailed discussions of trimming in Chapter 1).

The OP07 went on to become the "741" of precision op amps, that is the standard device of its precision class. It was (and still is) widely second-sourced, and many spin-off devices followed it in time.

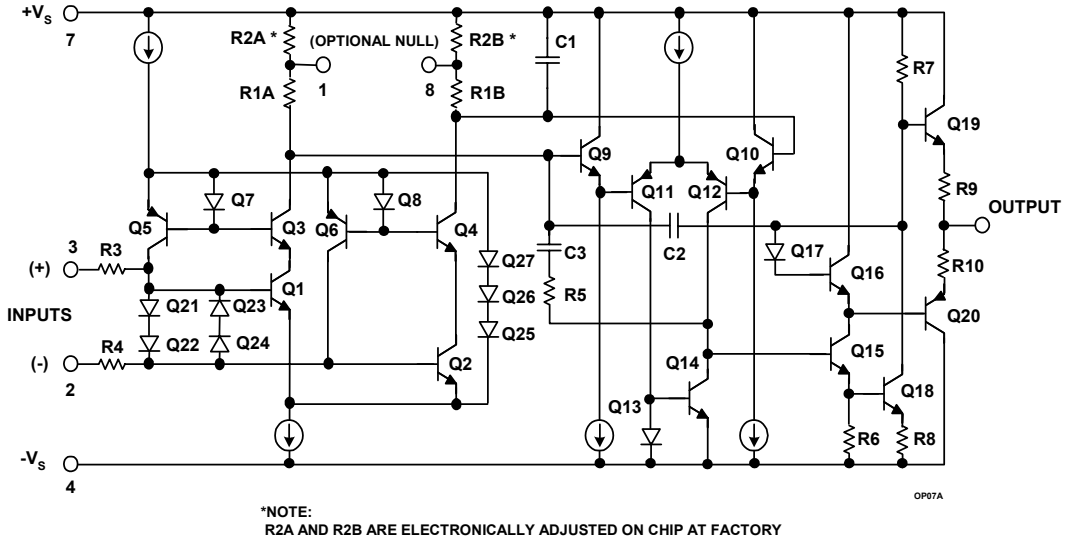

Figure H-22: *The OP07 monolithic IC op amp*

PMI went forward with the OP07 op amp evolution, and introduced the OP77, a higher open-loop gain version of the OP07 in 1988. The best grade OP77A featured a typical gain of ~142dB, an offset of 25µV, and a drift of 0.3µV/°C(max). Later, an additional device was added to the roster, the OP177. This part offered similar performance to the OP77A, as the OP177F, specified over the industrial temperature range.

Prior to the 1990 acquisition of PMI by ADI, the ADI designers turned out some excellent OP07 type amplifiers in their own right. Designed by Moshe Gerstenhaber, the AD707 essentially matched the OP77 and OP177 spec-for-spec, operating over commercial and industrial ranges (see Reference 28). It was introduced in 1988. The AD708 dual was also offered in 1989, providing basically the performance of two AD707's. Moshe Gerstenhaber also designed the AD708 (see Reference 29).

The OP27 and OP37

As noted above, the OP07 lineage also included other related devices. Two such op amps, also designed by George Erdi at PMI, were the OP27 and OP37. These devices were released in 1980 (see References 30 and 31). Figure H-23 below is a simplified schematic of the OP27 and OP37 op amps.

From the apparent similarity to the OP07 schematic of Fig. H-22, it might be easy to conclude that this amplifier was an adaptation of the OP07. However, the similarity ends in the fact that they are both three-stage amplifiers, and in truth the two different designs have been optimized with different end applications in mind.

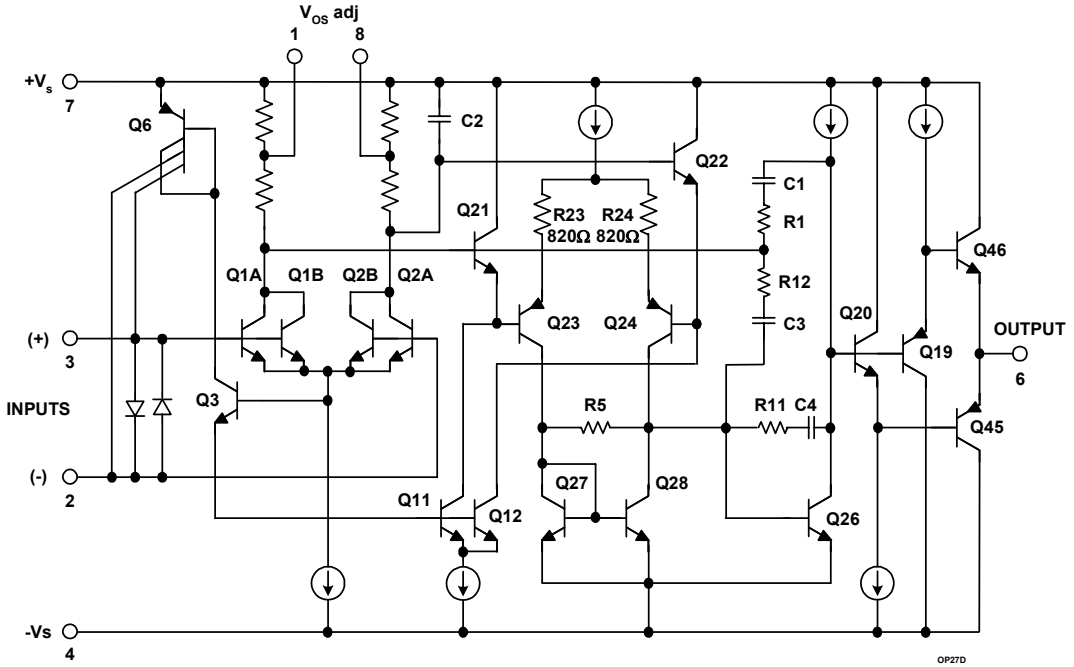

Figure H-23: *The OP27 and OP37 monolithic IC op amps*

In the design process of OP27/37, an examination of various noise sources was done, and the three-stage architecture is biased with the goal of both lower input noise, and higher speed (see Reference 31, again). Thus the stage operating currents are higher vis-à-vis the OP07, and provision for a decompensated version was also done (the OP37, stable at a gain of five). This was achieved by making the compensation cap C1 smaller on the OP37 version, while the basic OP27 is stable at unity gain. Towards the lower input noise, the current-limit protection resistors in series with the inputs were also removed.

The OP27 did achieve the goals of lower noise and greater speed, with an input noise density of 3.0nV/√Hz at 1kHz, a 1/f corner of 2.7Hz, while the slew rate was 2.8V/µs and unity gain-bandwidth was 8MHz. While realizing these new AC performance levels, the OP27/37 also retained impressive DC specifications as well. With a zener-zapped trim to the first stage, the offset was 25µV(max), drift was 0.6µV/°C(max), and voltage gain was typically 126dB. The OP27 and OP37 went on to also become widely second-sourced, and became standard devices for use as low noise, high DC precision amplifiers.

Single-Supply and Micro-Packaged OP07 Compatibles

It would be understandable for many to conclude that the high DC precision represented by the better performing versions of the OP07 and OP27 class devices would be sufficient for most applications. More recently however, the ground rules have changed.

While the high precision is still often sought, amplifier versions with single-supply capability are now in demand, as are tiny and even more tinier packages. The traditional chip designs of the OP07/27 generation often can't work in new applications, either because the circuit demands single-supply operation, and/or the package size is incompatible with the large chip size of the older products.

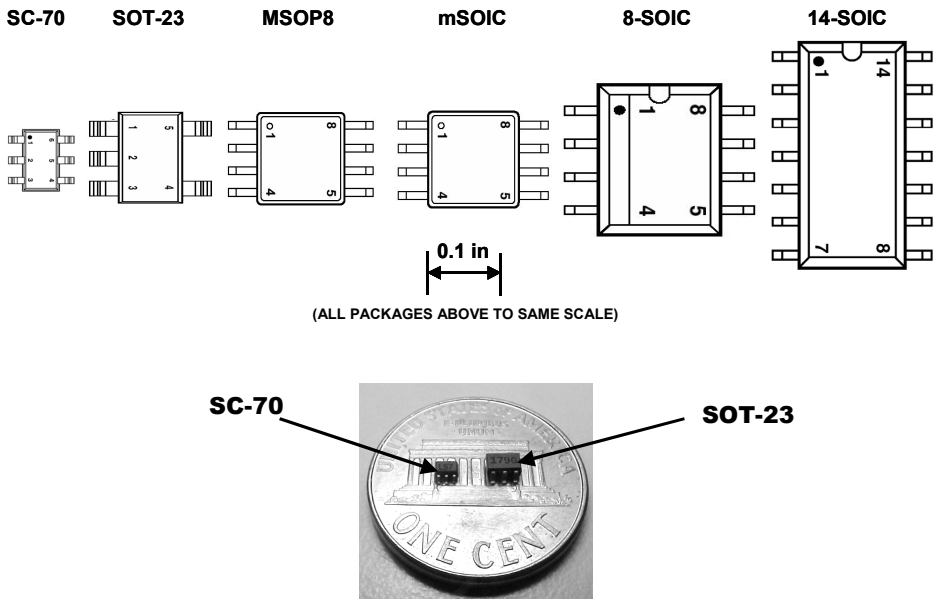

Figure H-24: *The relative scale of some modern IC op amp packages*

The small relative scale of some of these modern IC packages is shown in Figure H-24, above. In the upper row, the decreasing size going from the 14 pin SOIC at the right to the SC-70 package at the left is quite clear. In the bottom portion of the figure, the SC-70 and SOT-23 packages are shown in another perspective, relative to a US one cent piece.

Two very recent OP07 lineage devices from ADI address these two issues. One is the *OP777* op amp series, which includes the OP777 (single), the OP727 (dual) and OP747 (quad) devices (see Reference 32). Designed by Derek Bowers and released in 2000, these new devices feature rail-to-rail CMOS output stages, a ground sensing bipolar PNP input stage, and a 270µA operating current. These designs operate over a supply range of 2.7-30V, in MSOP, SOIC and TSSOP packages.

Even more recent is the *OP1177* series, also designed by Derek Bowers and released in 2001. This series includes the OP1177 (single), the OP2177 (dual) and OP4117 (quad) devices (see Reference 33). This design series has a slightly higher operating current than the OP777 series, at 400µA per amplifier, and it operates from dual supplies of ±2.5 to ±15V. While not aimed at single-supply applications, this design does offer a wide range of small packages, with specifications applicable over a –40 to +125°C range.

Precision JFET IC Op Amps— AD503 to the AD820/822/824 and AD823 Families

The development of FET input IC op amps was neither as rapid nor as straightforward as the growth of their bipolar IC cousins. There were numerous reasons for this, which will become apparent as this narrative progresses.

First of all, the relative scarcity of high quality FET input op amps early in the history of ICs was certainly not because no one wanted them, but rather because very few could make them. Many FET input op amps had already existed from the days of modular and hybrid types (see preceding section of this Chapter), and FET input amplifiers in general were highly sought after for fast signal processing and low current instrumentation uses. Unfortunately, the development of high performance monolithic FET IC op amps was to become a somewhat long and torturous process.

An early FET input op amp was by Douglas Sullivan and Modesto (Mitch) Maidique. This ADI amplifier was known as the *AD503* and *AD506*, and it was released in 1970. A schematic and photo of the chips used for this design is shown below in Figure H-25.

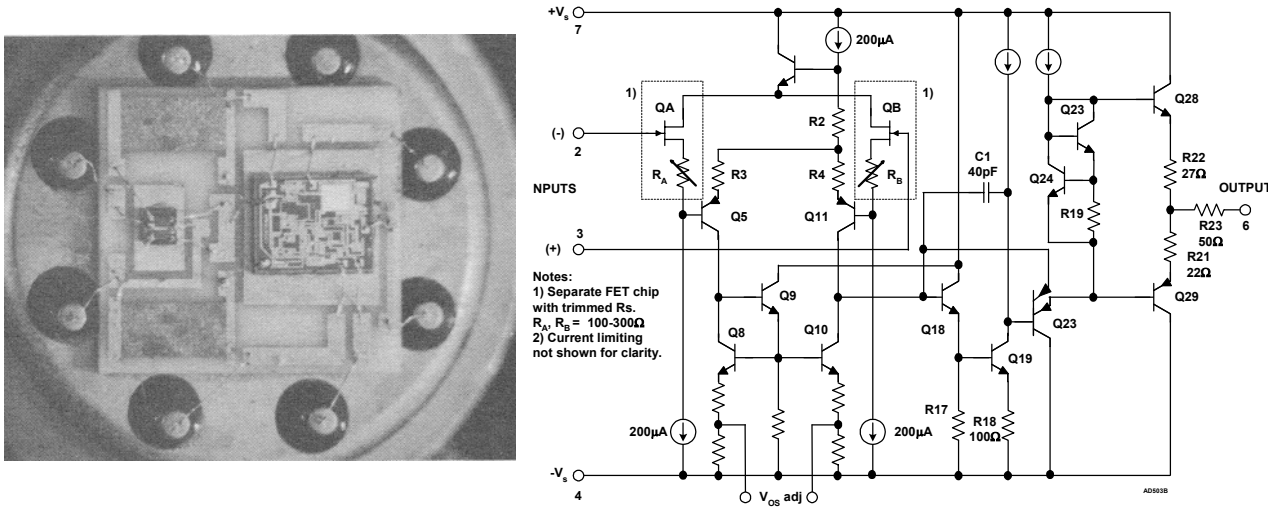

Figure H-25: *The AD503 and AD506 two-chip hybrid IC op amps*

As should be evident from the schematic, this amplifier used two chips. One was a main amplifier chip, somewhat similar to a 741 after the input stage. The input stage consisted of a selected N-channel JFET pair, Q_A and Q_B. In the photo to the left, the two active chips can be noted at center right and left, respectively. Also used was a pair of trimmed resistors, R_A and R_B, shown at the left upper and lower corners of the substrate.

In the case of the AD506J and K grades, these resistors were laser trimmed for lowest offset, delivering to the user devices with maximum offset of no more than 3.5 and 1.5mV, respectively. The non-trimmed AD503 was similar in function, except for higher initial offset (which could be trimmed by the user, via the offset adjust pins). Because of the bootstrapping configuration used, the design had excellent CM specifications—CMR typically was 90dB, with constant bias current over the input range. It is worthy of note

that the AD503/506 bias current (as well as later ADI FET input devices) was specified *after a five minute warmup period, a conservative method not used by all op amp makers*.

Operation of the AD503/506 family was described in a 1971 applications bulletin (see Reference 35). There were also related uncompensated amplifier types, namely the *AD513* and *AD516* (see Reference 36). Later on, an even tighter *AD506L* grade was introduced, with a 1mV(max) offset and a 10µV/°C(max) drift (see Reference 37).

Shortly after the time frame of the early bipolar op amps, there were also several completely monolithic FET input IC op amps, for example the Fairchild *µA740*, and the Intersil *ICL8007* (see Reference 38). The ICL8007 was perhaps the best of these early completely monolithic P-channel FET input op amps, but that isn't saying a lot. Offset voltages could be as high as tens of mV, and drifts several tens of µV/°C. Input current was low, but was about the best that could be said of them.

The problem with all the monolithic FETs of the early seventies was simply that the FET devices themselves were poorly controlled. To make any material improvement in monolithic FET IC op amps, a fundamentally better process was needed.

In 1974, this was to happen, in the form of a paper by two National Semiconductor engineers, Rod Russell and David Culmer (see Reference 39). In this paper Russell and Culmer described a new fabrication technique for making FET devices, using *ion-implantation*. This allowed more stable P-channel JFETs to be made, along with quality NPN bipolars. In the same paper was also described a new series of FET input op amps, the *LF155/LF156/LF157* devices. These parts had much lower offsets and drifts than any previous all-monolithic FET op amp, 5mV(max) for offset and a typical drift of 5µV/°C.[1]

While the idea of ion-implantation caught on big, and became an industry standard method of IC fabrication, the same was not entirely true for the LF155/156/157 devices. Although they were second sourced (and are still available), others sought a cleaner solution to a standard FET IC op amp topology. The LF155 series used an asymmetrical topology, and there was difficulty controlling the quiescent current.

At PMI, George Erdi designed an FET input op amp series to compete with the National LF155/156/157 parts, which were called the *OP15*, *OP16*, and *OP17*, respectively. They used zener-zap trimming and bias current cancellation; and the best A and E grades achieved offsets of 500µV(max), and drifts of 5µV/°C(max).

RCA introduced their answer for a general purpose FET input op amp, the *CA3130*, also in 1974 (see Reference 40). Using a P-channel MOS input stage and a CMOS output stage, this device was suitable for lower voltage, single-supply uses. It was however, not a high precision part, due mostly to the poor stability of the MOS devices used. Nevertheless, it was high on general utility, as were the *CA3140* and other spin offs.

Texas Instruments got into the FET op amp market with their own amplifier series in 1978 (see Reference 41). These devices, in the form of singles, duals and quads of

[1] Specifications are quoted from December 2001 data sheet for LF155 and LF156 devices.

various power ratings (and speed) did use a PFET input pair operating into a current mirror, with a conventional second stage (ala the 101 or 741, but with higher speed). This line, the *TL06x, TL07x,* and *TL08x*, became standard devices, and are still available. While the faster slew rate and symmetrical signal path of these devices helped AC applications, they also weren't designed for high precision.

ADI had been working on an improved FET input monolithic IC op amp, and introduced the first of a long series of devices, the *AD542*, in 1978 (see Reference 42). This two-stage circuit design used a P-channel JFET input differential pair, followed by a second stage integrator. Careful design and laser trimming achieved a maximum offset as low as 0.5mV in the AD542L, and a maximum drift of 10µV/°C. While this was not as good as the best bipolar input amplifiers, it was better than any other monolithic FET had done.

Continuing along this same path were other amplifiers such as the *AD544*, a higher speed relation to the AD542, introduced in 1980 (see Reference 43). Both of these devices were designed by Lew Counts, and were aimed at fast settling data acquisition use. They were followed in 1981 by dual counterparts, the *AD642* and *AD644* (see Reference 44). All these devices had trimmed, zero TC supply and input stage currents, for overall stability and predictable slew rate. These features were retained in later precision devices.

This series of JFET input op amps reached their highest precision in 1982, with the introduction of the *AD547* (see Reference 45). This device, designed by Scott Wurcer, achieved for the first time in a monolithic FET op amp a maximum drift of 1µV/°C, combined with a 250µV(max) offset, for the AD547L grade of the part. The goals of such low offset and drift were met with laser trimming for both offset and drift at the wafer level. This also has become routine for all high precision ADI FET amplifiers.

The AD711/712/713 and OP249 IC Op Amps

In 1986 the *AD711/712* and *AD548/648* FET op amp families were introduced by ADI (see Reference 46). The AD711/712 were, respectively, single and dual parts with finely tuned specifications, designed to meet both general purpose as well as intermediate precision uses, but at a moderate cost. The AD712KN sold for $1.90 in quantities of 100, while the AD648KN sold in similar lots for $2.60.

The series featured offset voltages of 500µV(max), a drift of 10µV/°C(max) for the AD711K, at a quiescent current of 3mA. The AD548K had similar offset voltage specifications, and half the drift, at a supply current of 200µA. JoAnn Close designed the AD548/648 series of amplifiers, with inputs from Scott Wurcer and Lew Counts. Scott Wurcer designed the AD711/712 series. The AD711 and AD712 were ultimately to be joined by a quad version, the *AD713*. This family of JFET IC op amps have been very popular since their introduction, and are still available.

Prior to the 1990 acquisition by ADI, PMI introduced their own dual JFET input IC op amp, the *OP249*. Designed by Jim Butler, this similarly specified dual op amp competed directly against the AD712.

Electrometer IC Op Amps

One area of great demand on op amp performance has traditionally been the *electrometer* amplifier, where input currents are required to be less than 1pA. In the days of the modular op amp, such ultra low current devices as the model 310 and 311 varactor bridge amplifiers had addressed this role. See the previous section of this chapter for a basic discussion on these amplifiers. It should be understood that the term electrometer amplifier is here meant to imply any amplifier with ultra low bias currents. It might be a varactor bridge based design, or it might be some other type of front end allowing ultra low bias currents, for example several semiconductor types— MOSFETs, JFETs, etc.

The AD515 and AD545 Hybrid IC Electrometer Amplifiers

In hybrid IC form, there were a couple of early electrometer op amps from ADI. The first of these was the *AD515*, a two-chip hybrid similar in general architecture to the AD503 (discussed in conjunction with Fig. H-25). The AD515 operated at a low power, with a quiescent current of 1.5mA (see Reference 47). It achieved some impressively low input currents; 75fA for the best grade AD515L, while maintaining a low offset of 1mV(max). The AD515 was a successful product, with specifications that were not soon to be eclipsed.

Another early two-chip hybrid IC electrometer op amp was the *AD545*, introduced in 1978 (see Reference 48). This design also operated at low power like the AD515, but with a higher maximum input bias current, 1pA for the AD545L.

Monolithic IC Electrometer Amplifiers

One of the early monolithic IC electrometer op amps, was the *OPA111*. Burr-Brown introduced this device in 1984 (see Reference 49). Designed by Steve Millaway, the OPA111 used a dielectrically-isolated process for fabrication.

The OPA111 circuit employed P-channel JFETs in the input and second stages, and a first stage cascode design for low bias current variation with input CM changes. The design addressed some of the weak points of the previous LF155/156/157 series (Reference 39, again). Reference 49 cited several LF15x circuit weaknesses; one was the use of current source loading for the input JFET pair, another was the means of offset trimming, and another was potential susceptibility to popcorn noise, due to the noise currents of the second stage bipolar differential pair. These points were addressed by the OPA111 design.

The OPA111 name was said to have been based on the combination of three key specs; 1mV(max) offset, a drift of 1μV/°C(max), and an input voltage noise of 1μVrms in a 10Hz-10kHz bandwidth. This particular combination of specifications was tough to beat, and the OPA111 became a successful IC op amp.

Released in 1987, the first completely monolithic IC electrometer op amp from ADI was the *AD549*, designed by JoAnn Close and Lew Counts (see Reference 50). This op amp achieved its low bias current by virtue of the use of a new "topgate" FET, as designed by Jody Lapham and Paul Brokaw (see Reference 51), plus a sophisticated scheme of bootstrapping around the critical input P-channel JFET pair.

A schematic as adapted from the associated patent is shown in figure H-26, below (see Reference 52). In the AD549 circuit, the input FETs are J6 and J7 with the input signals applied to their top gates at 10 and 12. The back gates BG1 and BG2 of the pair are biased at approximately the same DC level by a bootstrap loop through Q14, and Q13-Q8. A second bootstrap loop through J4 and J8-J9 bootstraps the drains of J6-J7, thus providing for an input bias current level independent of CM voltage, over a ±10V range.

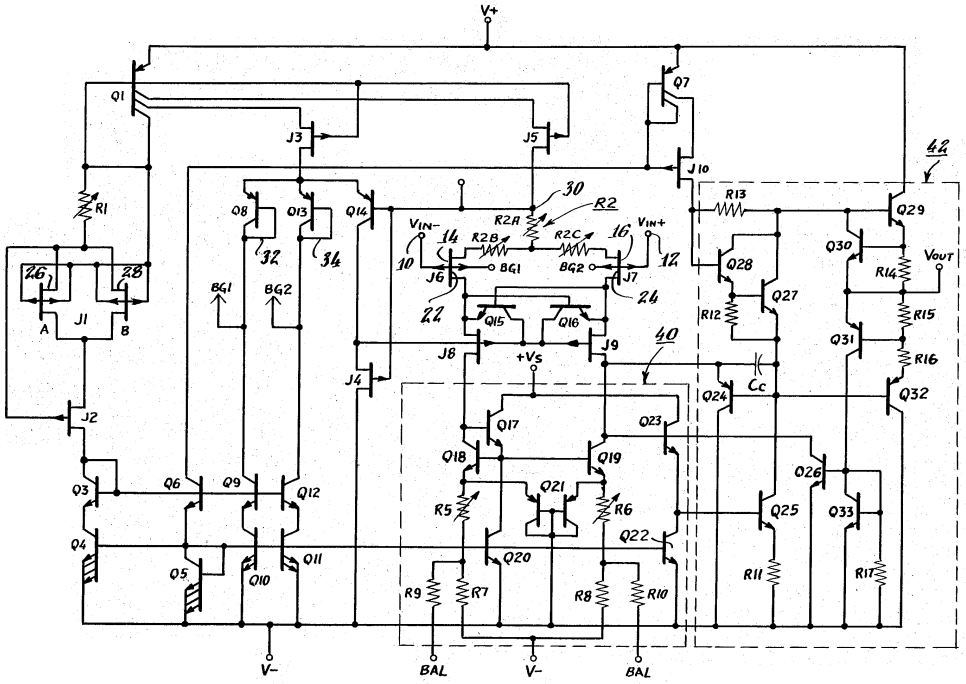

Figure H-26: *The AD549 electrometer IC op amp schematic (adapted from US Patent 4,639,683)*

With this circuit, built on a junction-isolated process, the AD549L was able to achieve a bias current of less than 60fA, along with a 500µV(max) offset and a drift of 10µV/°C(max). It was provided in a hermetically sealed TO-99 package, with pin 8 connected to the case for guarding within the final application circuit. The AD549L sold for $15.45 in 100 piece lots.

In 1988 ADI introduced another electrometer amplifier based on the design of the AD549, the *AD546* (see Reference 53). JoAnn Close also designed this op amp, and it was offered in a plastic package with somewhat relaxed specifications (vis-à-vis the AD549). The AD546KN had a maximum bias current of 500fA, a maximum offset of 1mV, and a drift of 20µV/°C(typ). It sold for $4.50 in 100 piece lots.

The very latest electrometer amplifier in this series is the still supplied *AD795*. It is available in an SOIC package and has bias currents of 1pA or less (see Reference 54).

The AD743/745 Low Noise JFET IC Op Amps

Prior to about 1990, input voltage noise performance in JFET IC op amps had never been competitive with the best bipolar devices, many of which achieved noise densities of 3nV/√Hz (see earlier OP27 discussions).

In 1990, ADI introduced an answer to applications such as hydrophone amplifiers, which require simultaneously low voltage and current noise from an amplifier. The new amplifier was the *AD743* and *AD745*, designed by Scott Wurcer (see Reference 55). The design of these amplifiers attacked the voltage noise issue by the use of a quad array of very large input transistors, as described in Reference 56. [1]

The result was an input referred noise of 2.9nV/√Hz (at 10kHz) for the two devices, and precision DC amplifier performance specifications. The basic AD743 is a unity-gain stable part, while the faster AD745 is stable at noise gains of 5 or more.

The AD820/822/824 and AD823 Series JFET IC Op Amps

In the early 1990's, the first of a series of JFET op amps on the ADI CB process began to appear. This process featured comparable speed and gain NPN and PNP bipolars, designed by Jody Lapham and Brad Scharf (see References 57 and 58). It also had an N-channel FET structure, and a neat feature of this FET was that the pinchoff voltage allowed it to be used as a differential pair at the op amp front end, and the two gates could operate linearly to the negative rail. Thus with a common-emitter complementary bipolar output, a rail-to-rail output stage could be built. The combination of these two key features created a single (or dual) supply op amp with a low-current JFET input stage.

The first op amp of this type to appear was the *AD820*, a single low-power op amp, released in 1993 (see Reference 59). The AD820 was designed by JoAnn Close and Francisco dos Santos. The device architecture was very flexible, and it could be operated from single supplies as low as 3V, or from dual supplies of up to ±18V. The input bias current was 10pA(max) for the AD820B, and the quiescent current was 800μA (typical).

With the success of the AD820, a dual version was the obvious next step, and the *AD822* appeared in 1994, with specs similar to the AD820 (see Reference 60). Rounding out this family next was the *AD824*, which appeared in 1995 (see Reference 61).

The AD820/822/824 were relatively low power parts, with moderate speed. In 1995 a higher speed dual using the same general topology appeared, the *AD823* (see Reference 62). Designed by Jeff Townsend, this amplifier had a 16MHz bandwidth, and a 22V/μs slew rate. It also operated from a wide supply range, ±1.5 to ±18V dual supplies, or single supplies of +3 to +36V.

[1] Of course, "very large" is a relative description. Nevertheless, Fig. 6 of Reference 56 shows the four input stage transistors consuming about ½ the chip area.

High Speed IC Op Amps

In the earliest years of IC op amps, everyone was using essentially the same NPN bipolar process, and speed was severely limited because of the slow PNP transistors available. An early scheme to partially get around the PNP bottleneck was the *LM118/218/318*, designed by Bob Dobkin at National Semiconductor in 1971 (see Reference 63). ADI produced their own version of this op amp, the *AD518*, designed by Dave Kress. Although these amplifiers did achieve much higher slew rate and bandwidth, they did not settle fast, nor were they well-suited to driving low impedance loads.

In the early seventies, just about the only truly fast IC process was owned by Harris Semiconductor. This dielectrically isolated process produced equal speed NPN and PNPs, and the Harris HA2500 series became popular for fast settling characteristics. In 1973 ADI released the fast *AD509* op amp, a screened Harris part (see Reference 64).

Until junction isolated CB processes came on board, the dielectrically isolated parts were to dominate high speed applications. There were however, notable exceptions to this general rule. The *AD744*, designed by Scott Wurcer, was introduced in 1988 (see Reference 65). Although this op amp still used a basic NPN process, it took advantage of ion-implanted P-channel FETs for the input differential stage, and could settle quickly and cleanly, reaching a 900ns settling time to 0.01%.

ADI introduced a high speed 36V CB process in 1988 (see References 57 and 58, again), and with it, a host of fast IC op amps. Among these were a high speed voltage feedback group, the *AD840* series, and the *AD846* current feedback op amp, all designed by Wyn Palmer. Many other very successful op amps were to soon follow in this series, using the CB process. Notable among them were the unity-gain stable *AD847* and externally compensated *AD829*, also designed by Wyn Palmer. Later on, the *AD811* designed by Dave Whitney, was among the first high performance current feedback op amps available on the CB process, achieving very low video distortion specifications while driving 75Ω cables (see Reference 66).

Frank Goodenough's Op Amp Reporting for Electronic Design

A notable documentation source on these high speed op amp developments was an **Electronic Design** series, by analog editor Frank Goodenough (see References 67-71).

The CB process was just the beginning of ADI high speed IC op amps, and within less than a decade a further jump in performance was produced. This was the 12V XFCB process, introduced in 1993 (see References 72 and 73). This produced such key parts as the *AD8001*, designed by Scott Wurcer (see Reference 74). The AD8001 set new performance standards, hitting a bandwidth of 800MHz on ±5V supplies, and achieving very low video distortion.

Frank Goodenough's op amp articles continued to provide a valuable source of IC performance, as well as historical references, through the late 1990's, including other op amp categories as well (see References 75-78). He passed away in February of 1998, and was fittingly memorialized by Roger Allan of **Electronic Design** (see Reference 79).

REFERENCES: IC OP AMPS

(Note— appended annotations indicate relevance to op amp history.)

Birth of the Monolithic IC Op Amp, General Purpose IC Op Amps

1. Bob Widlar, "Design Techniques for Monolithic Operational Amplifiers," **IEEE Journal of Solid-State Circuits**, Vol. SC-4, August 1969 *(Design methods used in μA709, LM101A and LM108)*.

2. "The μA702 Wideband Amplifier," Chapter 5 within James N. Giles, Editor, **Fairchild Semiconductor Linear Integrated Circuits Handbook**, Fairchild Semiconductor, 1967, pp. 33-55. *(A detailed design and application discussion of the μA702 IC op amp).*

3. R. J. Widlar, "A Unique Circuit Design for a High Performance Operational Amplifier Especially Suited to Monolithic Construction," **Proceedings of the NEC***,* Vol. XXI, October 1965, pp.85-89 (*The uA709, the first widely used IC op amp)*.

4. Robert J. Widlar, "Monolithic Op Amp with Simplified Frequency Compensation," **EEE**, July 1967 (*The LM101 IC op amp)*.

5. James Solomon, The Monolithic Operational Amplifier: A Tutorial Study," **IEEE Journal of Solid-State Circuits**, Vol. SC-9, No. 6, December 1974. See also National Semiconductor AN-A. *(The classic paper on IC op amp design techniques)*.

6. Dave Fullagar, "A New High Performance Monolithic Operational Amplifier," **Fairchild Semiconductor Application Brief***,* May 1968 *(The uA741 IC op amp)*.

7. Robert J. Widlar, "IC Op Amp with Improved Input-Current Characteristics," **EEE**, December 1968 *(The LM101A IC op amp)*.

8. Ronald Russell, Thomas Frederiksen, "Automotive and Industrial Electronic Building Blocks," **IEEE Journal of Solid-State Circuits**, Vol. SC-7, December 1972, pp. 446-454, *(The LM324 and other single-supply ICs)*.

9. Data sheet for **AD741J, K, L, S Lowest Cost High Accuracy IC Op Amps**, Analog Devices, Inc., January 1973.

Super-Beta IC Op Amps

10. Robert J. Widlar, "The LM110 An Improved IC Voltage Follower," **National Semiconductor LB-11**, March 1970 *(The use of super-beta transistors in follower-connected IC op amps LM102 and LM110)*.

11. R. J. Widlar, "Super Gain Transistors for ICs," **IEEE Journal of Solid-State Circuits**, Vol. SC-4, August 1969 pp. 249-251 *(General principles of super-beta transistors in IC op amps)*.

12. Jim Solomon, William Davis, P. Lee, "A Self-Compensated Monolithic Operational Amplifier With Low Input Current and High Slew Rate," **ISSCC Digest of Technical Papers***,* February 1969, pp.14-15 *(The use of super-beta transistors in the MC1556 IC op amp)*.

13. Bob Widlar, "IC Op Amp Beats FETs on Input Current," **EEE**, December 1969 *(The super-beta input LM108 IC op amp)*.

14. George Erdi, Jim Williams, "Precision Op Amp Serves Host of Needs," **Electronic Design**, September 1, 1983 *(The LT1008 and LT1012 super-beta input IC op amps)*.

15. Modesto Maidique, "A High Precision Super Beta Operational Amplifier," **IEEE Journal of Solid State Circuits**, Vol. SC-7, December 1972. See also: "AD508: Monolithic Chopperless Op Amp Super β Inputs, <1μV/°C Drift," **Analog Dialogue**, Vol. 6, No. 1, 1972. *(The super-beta input AD508 IC op amp)*.

16. Modesto Maidique, "Monolithic Operational Amplifier With 1 μV/°C Drift," **Analog Dialogue**, Vol. 5, No. 3 *(The AD504 IC op amp)*.

17. Preliminary Data sheet for **AD508J, K, L IC Chopperless Low Drift Operational Amplifier**, Analog Devices, Inc., June, 1972.

18. Doug Grant, "Low Drift Super Beta Op Amp," **Analog Dialogue**, Vol. 12, No. 1, *(The AD517 IC op amp)*.

19. Richard Wagner, "Laser-Trimming on the Wafer," **Analog Dialogue**, Vol. 9, No. 3, *(Laser wafer trimming of thin-film resistors for IC offset and gain)*.

20. "Precision Op Amp," **Analog Dialogue**, Vol. 24, No. 1 *(The AD705 super-beta precision IC op amp)*.

21. "Two Precision Dual Op Amp Families," **Analog Dialogue**, Vol. 24, No. 3 *(The AD706 and OP297 super-beta precision dual IC op amps)*.

22. "Quad Op Amp," **Analog Dialogue**, Vol. 25, No. 1 *(The AD704 super-beta precision quad IC op amp)*

Precision Bipolar IC Op Amps

23. George Erdi, "A Low Drift, Low Noise Monolithic Operational Amplifier For Low Level Signal Processing," **Fairchild Semiconductor Application Brief APP-136**, July 1969 *(The uA725 IC op amp)*.

24. George Erdi, "Minimizing Offset Voltage Drift With Temperature In Monolithic Operational Amplifiers," **Proceedings of NEC**, 1969 pp. 121-123 *(Method of offset trim for minimum drift in precision DC amplifiers)*.

25. George Erdi, "Instrumentation Operational Amplifier With Low Noise, Drift, Bias Current," **Precision Monolithics APP Note**, 1972 *(The OP05 IC op amp)*.

26. George Erdi, "A Precision Trim Technique for Monolithic Analog Circuits," **IEEE Journal of Solid-State Circuits**, Vol. SC-10, December, 1975 pp. 412-416 *(The "zener-zap" offset trim method)*.

27. Donn Soderquist, George Erdi, "The OP-07 Ultra-Low Offset Voltage Op Amp," **Precision Monolithics AN-13**, December, 1975 *(The OP07 IC op amp)*.

28. "Precision Bipolar Op Amp Has Lowest Offset, Drift," **Analog Dialogue**, Vol. 22, No. 1 *(The AD707 precision IC op amp)*.

29. Bill Schweber, "Dual Bipolar Op Amp Provides Superior Matching of Specs," **Analog Dialogue**, Vol. 23 No. 1 *(The AD708 precision IC op amp, dual of the AD707)*.

30. George Erdi, Tom Schwartz, Scott Bernardi, and Walt Jung, "Op Amps Tackle Noise-and for Once, Noise Loses," **Electronic Design**, December 12, 1980 *(The OP27 and OP37 IC op amps)*.

31. George Erdi, "Amplifier Techniques for Combining Low Noise, Precision, and High-Speed Performance," **IEEE Journal of Solid-State Circuits**, Vol. SC-16, December, 1981 pp. 653-661 *(Design techniques of the OP27 and OP37 IC op amps)*.

32. “Precision Micropower Single-Supply Op Amps Have 100-µV max Offset,” **Analog Dialogue**, Vol. 34, No. 4 *(The OP777, OP727, and OP747 precision single and dual supply, rail-rail output single/dual/quad IC op amps).*

33. Data sheet for "**Precision Low Noise Low Input Bias Current Operational Amplifiers OP1177/OP2177**," http://www.analog.com

Precision JFET IC Op Amps

34. Doug Sullivan, Modesto Maidique, "High Performance IC FET-Input Op Amp," **Analog Dialogue**, Vol. 4, No. 2, 1970 *(The AD503 and AD506 two-chip hybrid IC op amp).*

35. Richard S. Burwen, Doug Sullivan, "AD503, AD506 IC FET Input Operational Amplifiers Technical Bulletin," **Analog Devices Application Bulletin**, August 1971 *(Design and application of the AD503 and AD506 two-chip hybrid IC op amp).*

36. "FET-Input ICs Can Slew at 50V/µs," **Analog Dialogue**, Vol.5, No. 3, 1971 *(The AD513 two-chip hybrid IC op amp).*

37. "AD506L: Economical Low-Drift FET-Input," **Analog Dialogue**, Vol. 7, No. 1, 1973 *(The AD506L two-chip hybrid IC op amp).*

38. Dave Fullagar, “Better Understanding of FET Operation Yields Viable Monolithic JFET Op Amp," **Electronics**, November 6, 1972 *(The ICL8007 IC op amp).*

39. Ronald W. Russell, Daniel D. Culmer, "Ion-Implanted JFET-Bipolar Monolithic Analog Circuits," **ISSCC Digest of Technical Papers**, February 1974, pp. 140-141, 243 *(Ion-implanted JFETs, and the LF155/156/157 series of FET IC op amps)*.

40. Otto Schade, Jr. "CMOS/Bipolar Linear Integrated Circuits," **ISSCC Digest of Technical Papers**, February 1974, pp. 136-137. See also: R. L. Sanquini, “Building C-MOS, Bipolar Circuits on Monolithic Chip Enhances Specs,” **Electronics**, October 3, 1974 *(The CA3130 CMOS IC op amp)*.

41. Dale Pippenger, Dale May, "Put BIFETs Into Your Linear Circuits," **Electronic Design,** January 4, 1978, pp. 104-107, 109-111.

42. Lew Counts , Rich Frantz, "High-Performance, Low-Cost Bipolar-FET Op Amp," **Analog Dialogue**, Vol. 12, No. 3, 1978 *(The AD542 monolithic FET IC op amp).*

43. "Fast FET Op Amp," **Analog Dialogue**, Vol. 14, No. 1, 1980 *(The AD544 IC op amp).*

44. "High-Performance Dual FET Op Amps," **Analog Dialogue**, Vol. 15, No. 2, 1981 *(The AD642/644 IC op amps)*.

45. "First Monolithic FET Op Amp with 1µV/°C Drift," **Analog Dialogue**, Vol. 16, No. 1 1982 *(The AD547 drift and offset trimmed IC op amp)*.

46. "Highest-Performing Low-Cost BiFET Op Amps," **Analog Dialogue**, Vol. 20, No. 2, 1986, pp.22.

47. Dave Kress, "FET-Input Electrometers," **Analog Dialogue**, Vol. 10, No. 1, 1976, pp.11.

48. "FET-Input AD545," **Analog Dialogue**, Vol. 12, No. 3, 1978, pp.18.

49. Steve Millaway, "Monolithic Op Amp Hits Trio of Lows," **Electronic Design,** February 9, 1984 *(The OPA111 low bias current IC op amp)*.

50. JoAnn Close, Lew Counts, “Junction-Isolation Process Yields 50-fA Op Amp," **Electronic Design**, July 10, 1986, pp.99-102, 104. See also: JoAnn Close, "Monolithic Electrometer Has 60fA Max Bias Current," **Analog Dialogue**, Vol. 21, No. 2, 1987, pp. 22 *(The AD549 electrometer IC op amp)*.

51. Jerome F. Lapham, Adrian P. Brokaw, "Low-Leakage JFET," **US Patent 4,985,739**, filed April 27, 1987, issued January 15, 1991. *(Design of the ‘top-gate’ low-leakage JFET IC process)*

52. Lewis Counts, JoAnn Close, “Very Low Input Current JFET Amplifier," **US Patent 4,639,683**, filed February 7, 1986, issued January 27, 1987 *(The ‘top-gate’ low-leakage JFET IC process and AD549 IC op amp)*.

53. "High-Performance Electrometer Op Amp in Plastic 8-Pin DIP ," **Analog Dialogue**, Vol. 23, No. 4, 1988, pp. 12 *(The AD546 electrometer IC op amp)*.

54. “Low-Noise, Low-Drift Precision Op Amps for Instrumentation,” **Analog Dialogue**, Vol. 27, No. 1, 1993 *(The AD795 low noise, low I_B and OP213 dual single-supply, precision IC op amps).*

55. “FET-Input Op Amp Has Lowest Combined V and I Noise," **Analog Dialogue**, Vol. 25, No. 1, 1991, pp. 12 *(The AD743 and AD745 low noise IC op amps).*

56. Scott Wurcer, "A 3nV/√Hz, DC-Precise, JFET Operational Amplifier," **Proceedings of BCTM**, 1989, pp. 116-119. *(Design principles of the AD743 and AD745 low noise IC op amps).*

57. “Op Amps Combine Superb DC Precision and Fast Settling," **Analog Dialogue**, Vol. 22, No. 2, 1988 *(The AD846 IC op amp, the AD840 series, and the high speed CB process used).*

58. Jerome F. Lapham, Brad W. Scharf, "Integrated Circuit with Complementary Junction-Isolated Transistors and Method of Making Same," **US Patent 4.969,823**, filed May 5, 1988, issued Nov. 13, 1990. *(Design of the ADI CB IC process)*

59. “Single-Supply FET," **Analog Dialogue**, Vol. 27, No. 2, 1993 pp. 26 *(The AD820 single-supply rail-rail output IC op amp)*.

60. “Dual FET, 3 to ±18V," **Analog Dialogue**, Vol. 28, No. 1, 1994, pp. 24 *(The AD822 single-supply rail-rail output dual IC op amp)*.

61. “Quad JFET, Single-Supply Op Amp," **Analog Dialogue**, Vol. 29, No. 1 *(The AD824 single-supply, rail-rail output quad IC op amp)*.

62. “Dual 16MHz Rail-Rail FET,” **Analog Dialogue**, Vol. 29, No. 2 *(The AD823 single-supply, rail-rail output dual IC op amp)*.

High Speed IC Op Amps

63. Bob Dobkin, "LM118 Op Amp Slews 70 V/µs," **National Semiconductor LB-17**, September 1971 *(The high slew rate LM118 IC op amp)*.

64. "AD509: Fast Op Amp 2µs to 0.01%," **Analog Dialogue**, Vol. 7, No. 1, pp. 10 *(The AD509 fast IC op amp)*.

65. Kristen Dinsmore, "Fast, Accurate BIFET Op Amp Settles to 0.01% in 900ns Max," **Analog Dialogue**, Vol. 21, No. 2, 1988, pp. 14-15.

66. Dave Whitney and Walt Jung, “Applying a High-Performance Video Operational Amplifier," **Analog Dialogue**, Vol. 26, No. 1 1992, pp. 10-13 *(The AD811 high-speed, high output video IC op amp and applications)*.

67. Frank Goodenough, “Focus Monolithic IC Op Amps: Faster and More Precise,” **Electronic Design**, February 4, 1988 pp. 127-132 *(A survey of high-speed IC op amps)*.

68. Frank Goodenough, “A Slew of New High-Performance Op Amps Shatters Speed Limits,” **Electronic Design**, March 3, 1988 pp. 29-32 *(High-speed IC op amps and processes, including the ADI CB process)*.

69. Frank Goodenough, “New Processes, Designs Boost IC Op Amp Speeds,” **Electronic Design**, April 12, 1990 pp. 45-48, 52-56 *(Survey of high-speed IC op amps with emphasis on CB processes and current feedback architectures).*

70. Frank Goodenough, “Linear ICs Attain 8-GHz NPNs, 4-GHz PNPs," **Electronic Design**, December 19, 1991 pp. 35-37, 40, 43-45 *(The high-speed ‘UHF-1’ DI process as used by Harris).*

71. Frank Goodenough, “New Processes to Spawn Next-Generation Analog, Mixed-Signal, Power ICs,” **Electronic Design**, January 2, 1992 pp. 59-62, 64-66, 68, 70 *(Survey of high-speed process developments).*

72. Frank Goodenough, “Wideband IC Op Amps Reach New Bandwidth Highs,” **Electronic Design**, September 2, 1993 pp. 48, 50, 52, 56, 58, 63, 64-66 *(The ADI XFCB process, and a survey of other high-speed processes).*

73. Frank Goodenough, “IC Op Amps Combine Low Cost and Performance,” **Electronic Design**, September 2, 1993 pp. 39-40, 42, 46 *(Survey of high-speed processes, ADI AD8001 XFCB process IC op amp and AD96XX series IC op amps).*

74. “Fast Op Amp: High Performance, Low Power, Low Cost," **Analog Dialogue**, Vol. 28, No. 2, 1994 pp. 11 *(The AD8001 high-speed IC op amp, first on the XFCB process)*.

75. Frank Goodenough, “Silicon, Analog Processes Becoming More Sophisticated,” **Electronic Design**, May 2, 1994 pp. 97,98, 100-103 *(Survey of complementary and mixed signal compatible processes).*

76. Frank Goodenough, “Rail-Rail In-and-Out IC Op Amps Run Off 2.7V,” **Electronic Design**, May 16, 1994 pp. 51,52, 54, 56, 60, 64,-65 *(Survey of rail-rail, low voltage single-supply design techniques and IC op amp devices).*

77. Frank Goodenough, “Single-Supply Op Amps Come of Age,” **Electronic Design Analog Applications Issue**, November 7, 1994 pp. 52-61 *(Survey of rail-rail design techniques and IC op amp devices).*

78. Frank Goodenough, “Op Amp, ADC Topple Old Price/Performance Marks,” **Electronic Design**, December 5, 1994 pp. 75, 76, 78, 80, 81, 84, 87 *(New product highlight of high-speed, low power AD8011 IC op amp and AD878 ADC).*

79. Roger Allan, "Frank Goodenough: 1925-1998," **Electronic Design**, March 9, 1998 pp. 6.

ACKNOWLEDGMENTS:

Many helpful comments were received during the preparation of this section, and all are very much appreciated. In this regard, thanks go to Derek Bowers, JoAnn Close, Lew Counts, George Erdi, Bruce Hohman, Dave Kress, Bob Marwin, Bob Milne, Reza Moghimi, Steve Parks, Dan Sheingold, Scott Wurcer, and Jerry Zis

Classic Cameo

Bob Widlar— Linear IC Pioneer, Personality

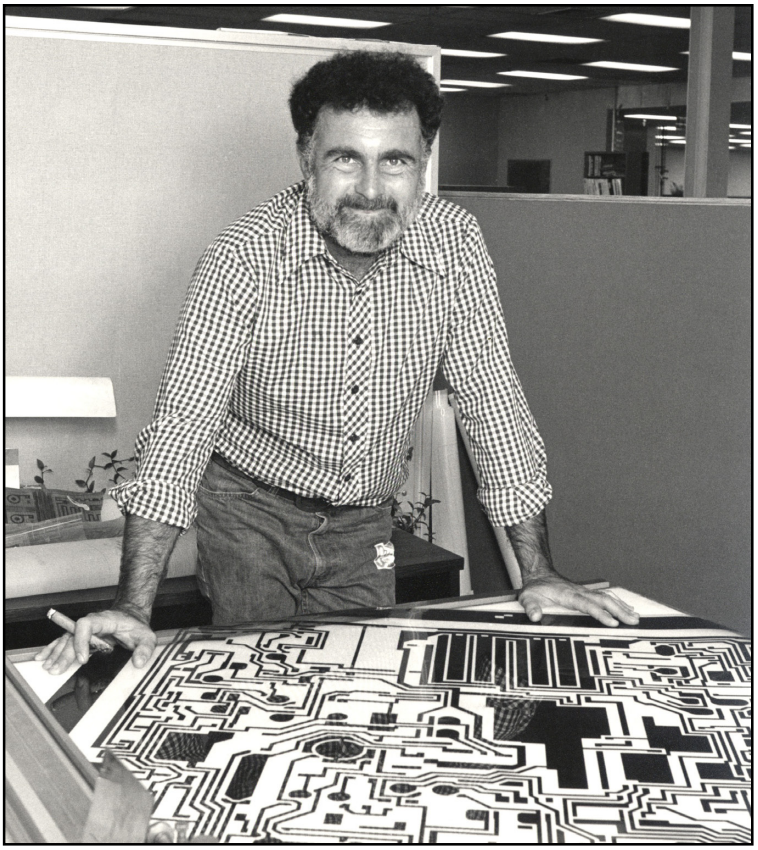

Bob Widlar reviewing his LM10 op amp, circa 1977
(Photo courtesy Bob Pease and National Semiconductor)

This history of IC op amp developments began with the work of Bob Widlar, back in the early 1960's. Starting with the first successful IC op amp, the μA709, Widlar was to author virtually an unbroken string of IC op amp successes. But, only his better-known *op amp* achievements are covered here, so readers should not feel he only designed op amps. As noted earlier, many linear IC design techniques he pioneered early on became standard methods. It should also be understood that he made major contributions to other IC circuits, for example IC bandgap voltage references, and IC three-terminal voltage regulators.

Throughout his career, Widlar was known not only as an innovator, but also as a colorful personality of the first order. Some Widlar stories can be found in a remembrance offered by Bob Pease. [1] Another tribute was also offered by Jim Solomon, which includes personal views of this most fascinating designer by a number of Widlar's co-workers. [2]

Bob Widlar passed away in February of 1991, at a relatively young age of 53 years. He was running near his home in Mexico, a favorite pastime of his. It is safe to say that his work efforts (and also his play antics) will not be forgotten.

---

[1] Bob Pease. "What's All This Widlar Stuff, Anyhow?" **Electronic Design**, July 25, 1991, pp. 146, 148, 150.

[2] James E. Solomon, "A Tribute to Bob Widlar," **IEEE Journal of Solid-State Circuits**, Vol. SC-26, No. 8, August 1991 pp. 1087-1089.